2 PART BOTTOM BLOCK
½ & 1 TON

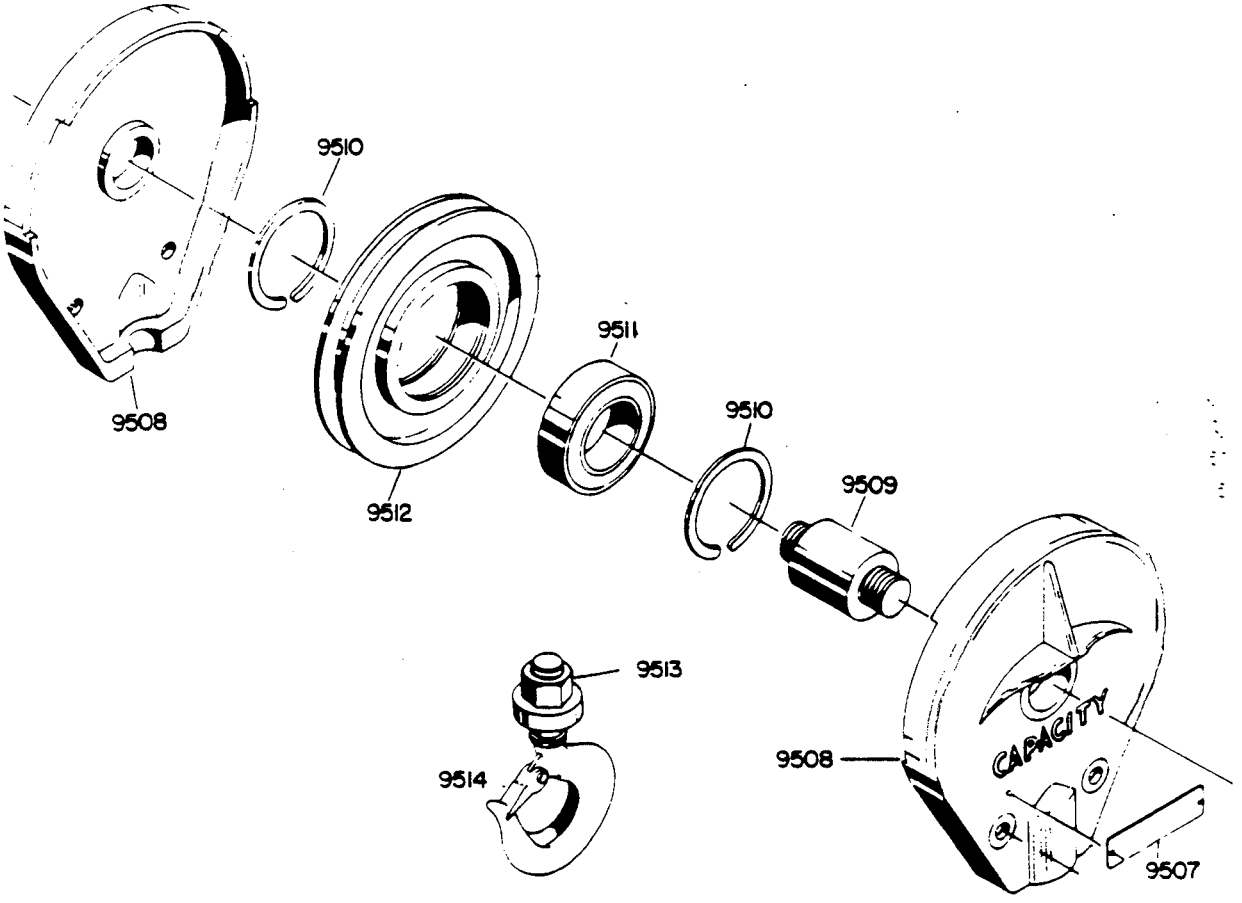

ITEM	DESCRIPTION	PART NUMBER	QTY
9507	Capacity Plate	22-06968-002	2
9508	Sheave Frame	24-04178-001	2
9509	Stud	22-06967-001	1
9510	Snap Ring	22-02244-013	2
9511	Bearing	6-30-050-205-1	1
9512	Sheave	23-05497-001	1
9513	Load Hook Assy	Not Available	
	Order Parts Separately		
	Hook	22-00875-001	1
	Nut	6-14-007-008-0	1
	Bearing	22-07602-001	1
9514	Latch Kit	22-09917-004	1
9515	Bottom Block Assy	24-04182-014	1

THIS MANUAL AND ITS CONTENTS ARE THE PROPERTY OF ROBBINS & MYERS, INC.

2 PART SINGLE REEVING DIAGRAM

2 Part Single Reeving Diagram Frame 1 Hoist

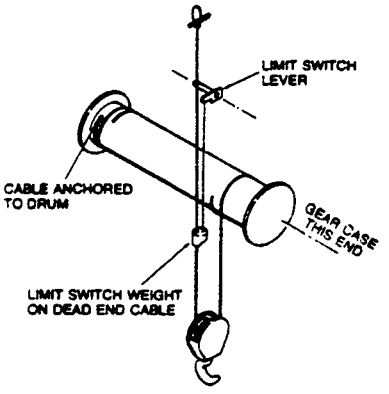

When the need for cable replacement has been established, proceed as follows:

CAUTION

Always wear heavy gloves when handling cables to avoid hand injuries from possible broken wires.

1. Run hoist in the down direction until only one half to one wrap of cable remains on the drum. Stop with drum in position where the keyhole slot anchoring the cable socket is most accessible.

2. Remove the rope clips and thimble from the dead end attachment and pull free cable end through, limit weight and block sheave. Free the socketed end of the cable from the hoist drum by removing plug from the keyhole slot. Discard old cable.

3. Inspect rope sheave, bearings, pin, etc. for wear or damage. Repair or replace as needed. *Note:* Placing a new cable in service in a sheave tracked or worn to a reduced groove radius will severely shorten cable life and can cause premature cable failure.

4. Unreel the replacement cable and inspect for any shipping damage, kinks, etc. Refer to Operation Maintenance Section — Wire Rope. If replacement cables are held in storage for extended periods of time, check for dried out lubricant or possible corrosion.

5. Place one half to one wrap of the socketed cable end around the drum, live cable leading off drum side nearest the motor. Place socket through the keyhole slot and replace plug, anchoring socket inside the drum.

6. Tighten plug securely, checking to make certain that surface of plug does not extend above bottom of rope groove in the drum.

7. Depending on the distance of the hoist to the floor, or surface where the block lies, it may be desirable to run the hoist (up direction) and wind part of the free cable onto the drum. Cable should be guided to ensure that it spools properly onto drum, and remaining free length of cable should be adequate to complete the reeving system with block lying on the floor.

8. If cable is to be threaded into the system without disassembly of the block, it will be helpful to tape a section of stiff wire to the free end of the cable. This "lead wire" can be formed to the sheave contour and rolled through the sheave, serving as a pilot to lead the cable into proper position.

9. Thus fitted, the free end, or live cable, from the drum is passed first into the block sheave, then through the hole in limit switch weight, and anchored to the dead end pin. Refer to reeving diagram. Make certain that rope clips are properly applied and tightened as outlined in the Operation Maintenance Section.

CAUTION

Make certain that limit switch weight is properly threaded onto dead end cable and operating freely. Safe operation of the hoist requires a properly operating limit switch mechanism.

10. Operate hoist up control to raise block from the floor. Check to be certain that sheave turns freely and that block hangs properly as shown in the reeving diagram.

11. Operate the block through the full range of lift for 2-3 cycles with empty hook. Check cables with block near the full up position to ensure they hang properly. Make 1-2 *short* lifts from the floor with a near capacity load. Follow this by retightening rope clips.

IMPORTANT

If equipped with optional geared limits, check and adjust limits as necessary to maintain original stop locations.

REFERENCE SHEET

ITEM	BASIC PARTS	SERIES A Model S1	SERIES B Model S1
9518-9536	Type "G" Trolley	6-5	6-5
9518-9536	Type "G" Trolley w/Pat'd Track Flat Tread Wheels	6-6	6-6
9537-9555	Hoist Controls	5-1	5-1
9641-9660	R4-A - 4.0 Motor Brake		2-3
9641-9660	R4A - 8.0 Motor Brake		2-4
9851-9865	Hoist Controls (Units Built After 9-1-83)		5-2
	2-Part Single Reeving	1-2	1-2
	4-Part Single Reeving	1-4	1-4
	Motor Brake Adjustment	2-5	2-5
	Load Brake Adjustment	4-9	4-9
	Trolley Wheel Setting	6-7	6-7

4 PART BOTTOM BLOCK
½ & 2 TON

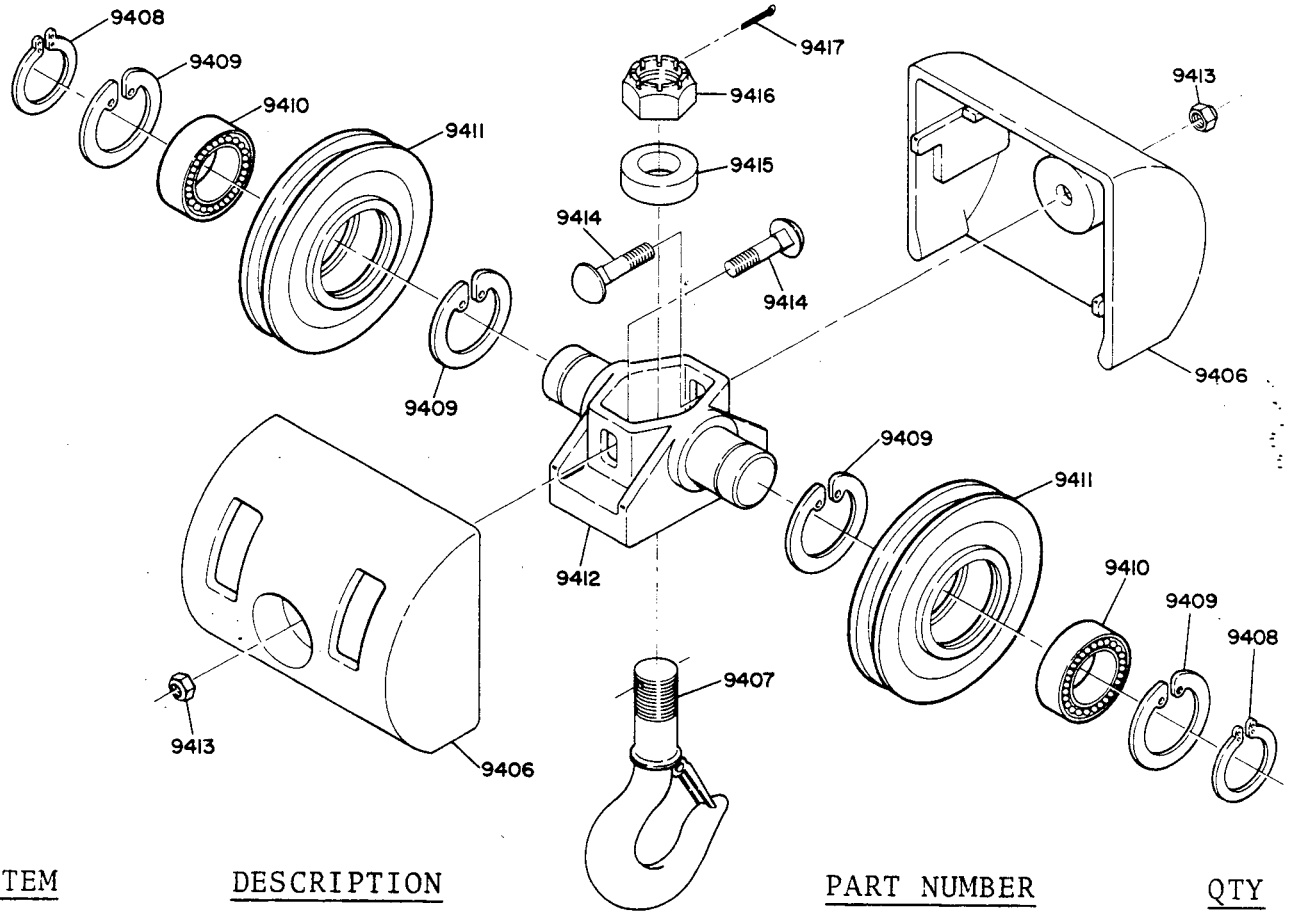

ITEM	DESCRIPTION	PART NUMBER	QTY
9406	Cover	24-06096-701	2
9407	Hook	23-00022-001	1
9408	Snap Ring	22-06497-010	2
9409	Snap Ring	22-06498-010	4
9410	Ball Bearing	6-30-050-205-1	2
9411	Sheave	23-08059-001	2
9412	Trunion	24-06095-001	1
9413	Hex Nut	22-11481-005	2
9414	Bolts	6-02-043-020-3	2
9415	Thrust Bearing	22-11701-001	1
9416	Load Nut	23-07796-009	1
9417	Cotter Pin	6-16-005-041-0	1
9418	Bottom Block Assembly	24-06094-001	1
	Latch Kit	22-09917-005	1
	Capacity Plate 1½ Ton	22-06968-004	2

4 PART SINGLE REEVING DIAGRAM

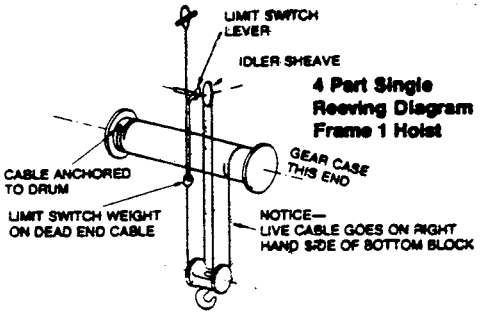

When the need for cable replacement has been established, proceed as follows:

CAUTION

Always wear heavy gloves when handling cables to avoid hand injuries from possible broken wires.

1. Run block to the floor and lay on its side with axis of sheaves parallel to axis of hoist drum. Continue to run hoist in the down direction until only one half to one wrap of cable remains on the drum. Stop with drum in position where the keyhole slot anchoring the cable socket is most accessible.

2. Remove the rope clips and thimble from the dead end attachment and pull free cable end through limit weight, sheaves, etc. Free the socketed end of the cable from the hoist drum by removing plug from the keyhole slot. Discard old cable.

3. Inspect rope sheaves, bearings, pins, etc. for wear or damage. Repair or replace as needed. *Note:* Placing a new cable in service in a sheave tracked or worn to a reduced groove radius will severely shorten cable life and can cause premature cable failure.

4. Unreel the replacement cable and inspect for any shipping damage, kinks, etc. Refer to Operation Maintenance Section — Wire Rope. If replacement cables are held in storage for extended periods of time, check for dried out lubricant or possible corrosion.

5. Place one half to one wrap of the socketed cable end around the drum, live cable leading off drum side nearest the motor. Place socket through the keyhole slot and replace plug, anchoring socket inside the drum.

6. Tighten plug securely, checking to make certain that surface of plug does not extend above bottom of rope groove in the drum.

7. Depending on the distance of the hoist to the floor, or surface where the block lies, it may be desirable to run the hoist (up direction) and wind part of the free cable onto the drum. Cable should be guided to ensure that it spools properly onto drum, and remaining free length of cable should be adequate to complete the reeving system with block lying on the floor.

8. If cable is to be threaded into the system without disassembly of the block or idler sheaves, it will be helpful to tape a section of stiff wire to the free end of the cable. This "lead wire" can be formed to the sheave contour and rolled through the sheaves, serving as a pilot to lead the cable into proper position.

9. Thus fitted, the free end, or live cable, from the drum is passed first into the block sheave at gearcase end, drum side, second, into the idler sheave, motor side, and third, into the block sheave at control end, drum side. Refer to reeving diagram.

10. Pass cable through the hole in limit switch weight and anchor to the dead end pin. Make certain that rope clips are properly applied and tightened as outlined in the Operation Maintenance Section.

CAUTION

Make certain that limit switch weight is properly threaded onto dead end cable and operating freely. Safe operation of the hoist requires a properly operating limit switch mechanism.

11. Operate hoist up control to raise block from the floor. Check to be certain that all sheaves turn freely and that block hangs properly as shown in the reeving diagram.

12. Operate the block through the full range of lift for 2-3 cycles with empty hook. Check cables with block near the full up position to ensure they hang properly. Make 1-2 *short* lifts from the floor with a near capacity load. Follow this by retightening rope clips.

IMPORTANT

If equipped with optional geared limits, check and adjust limits as necessary to maintain original stop locations.

▷ Old style parts may not be available. If unavailable, brake may be serviced by converting to a new style type R4 brake.

230 Volt "M to R" kit 27-12041-007
460 Volt "M to R" kit 27-12041-008

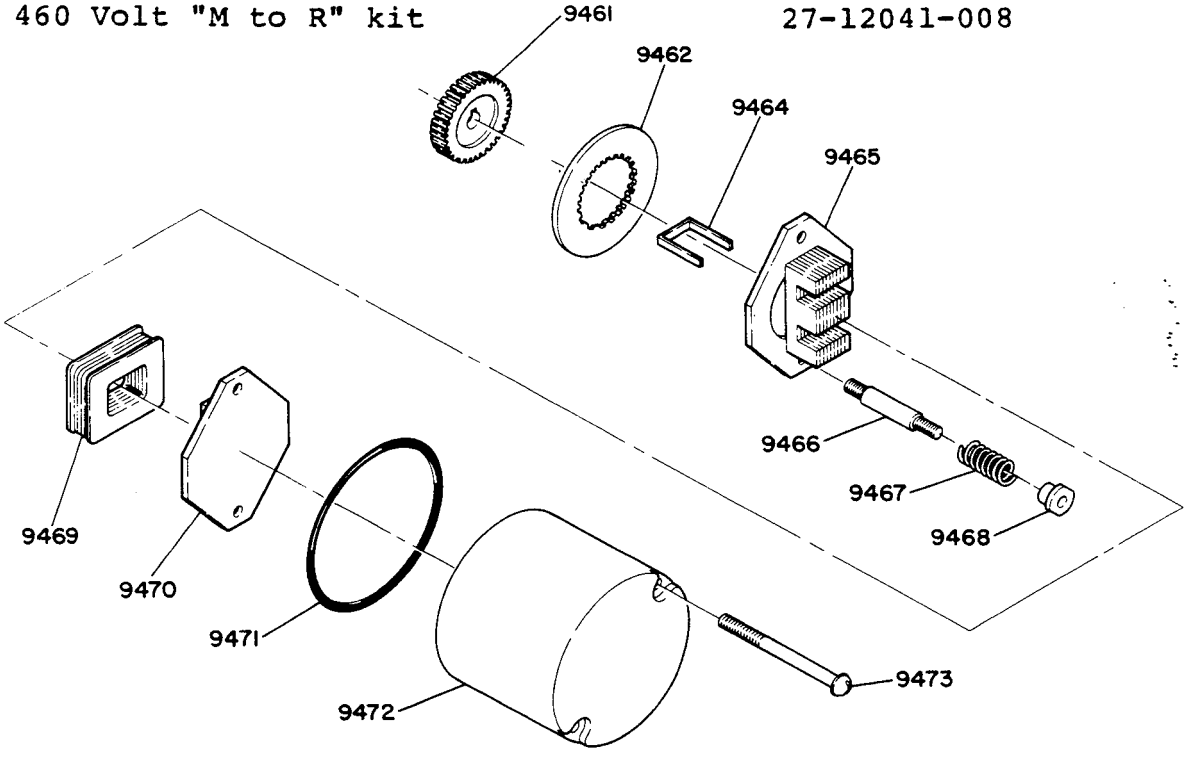

	ITEM	DESCRIPTION	PART NUMBER	QTY
		Brake Assy 230V	27-12041-003	1
		Brake Assy 460V	27-12041-004	1
	9461	Brake Hub	22-11627-002	1
	9462	Friction Disc	22-07965-002	1
▷	9464	Coil Support	22-08471-001	1
▷	9465	Pole Plate Assy	23-06314-001	1
▷	9466	Brake Stud	23-03645-021	2
	9467	Spring	22-03615-010	2
	9468	Adjusting Sleeve	22-08470-002	4
▷	9469	Coil 230V	22-08269-001	1
		Coil 460V	22-08269-006	1
		Coil 575V	22-08269-005	1
▷	9470	Armature Plate Assy	23-06374-001	1
	9471	"O" Ring Seal	22-09461-001	1
	9472	Brake Cover	23-06312-001	1
	9473	Cover Stud	6-02-053-080-1	2

FRAME 1

2-2

MAY 1983

M4 BRAKE SERIES A HOIST
DOUBLE DISC
2 HP MOTOR & UP

▷ Old style parts may not be available. If unavailable, brake may be serviced by converting to a new style type R4 brake.

230 Volt "M to R" kit	27-12041-007
460 Volt "M to R" kit	27-12041-008

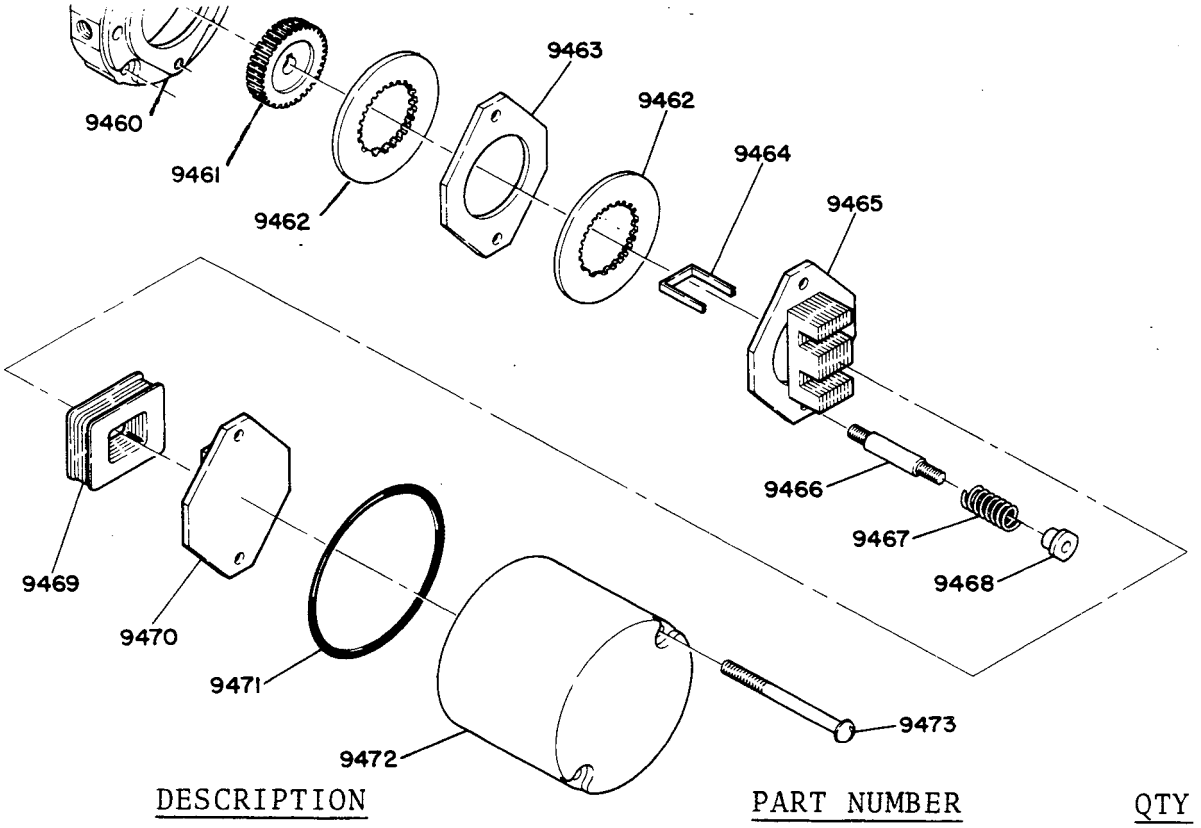

ITEM	DESCRIPTION	PART NUMBER	QTY
9460	Adaptor	24-05379-002	1
9461	Hub	22-11627-002	1
9462	Friction Disc	22-07965-002	2
9463	Thrust Disc	23-06313-007	1
▷ 9464	Coil Support	22-08471-001	1
▷ 9465	Pole Plate Assy	23-06314-001	1
▷ 9466	Stud	23-03645-021	2
9467	Spring	22-03615-010	2
9468	Adjusting Nut	22-08470-002	4
▷ 9469	Coil 230V	22-08269-001	1
	Coil 460V	22-08269-006	1
	Coil 575V	22-08269-005	1
▷ 9470	Armature Plate	23-06374-001	1
9471	"O" Ring Seal	22-09461-001	1
9472	Cover	23-06312-001	1
9473	Cover Stud	6-02-053-080-1	1
	Complete Brake Assy	21-03755-002	1

R4 BRAKE SERIES B HOIST
SINGLE DISC
1 HP MOTOR & UNDER

FRAME 1

2-3

OCT 1982

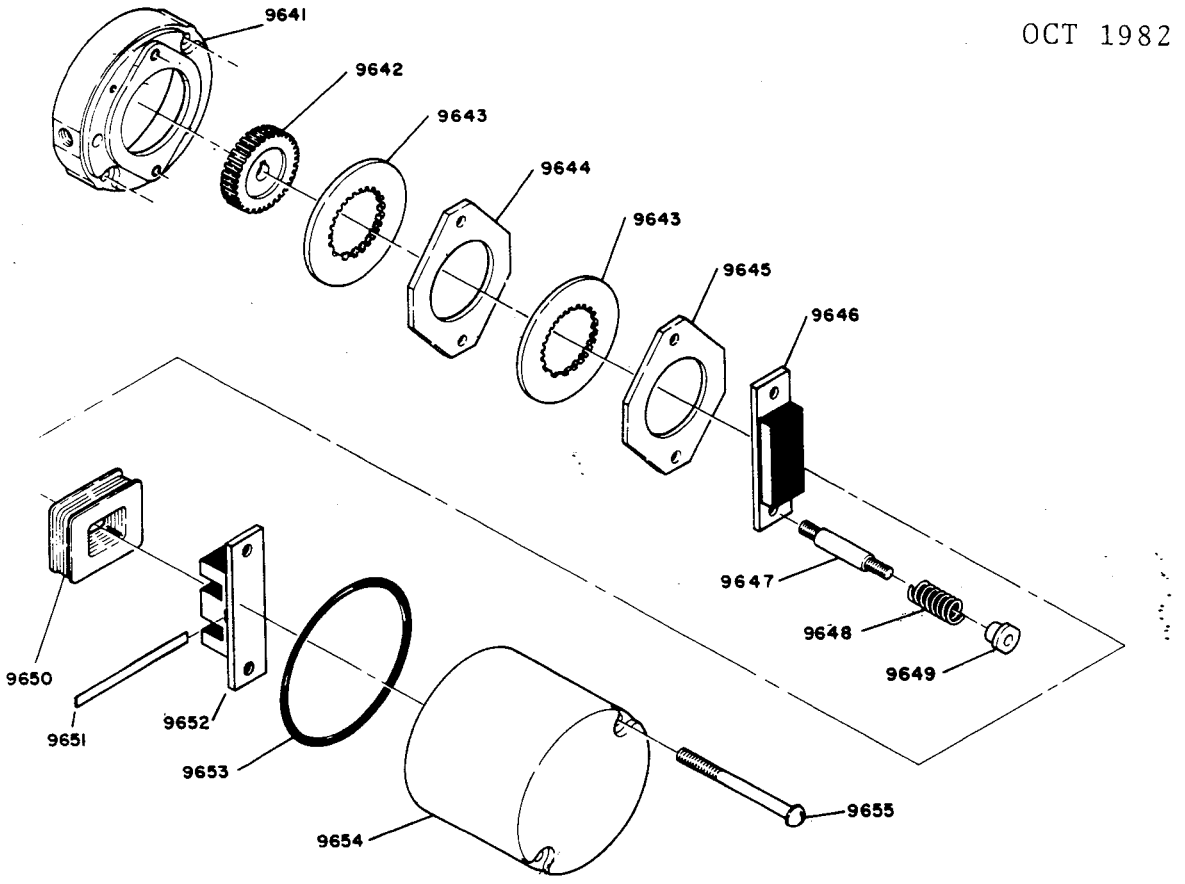

ITEM	DESCRIPTION	PART NUMBER	QTY
9641	Adaptor	24-05379-002	1
9642	Hub	22-11627-001	1
9643	Disc	22-07965-002	1
9644	Intermediate Disc	Not Required	
9645	Thrust Disc	23-06313-001	1
9646	Armature Plate	23-06374-003	1
9647	Stud	23-08072-001	2
9648	Spring	22-03615-010	2
9649	Adjusting Nut	22-08470-002	4
9650	Coil 230V	22-11698-001	1
	Coil 460V	22-11698-002	1
	Coil 575V	22-11698-003	1
9651	Wedge	22-08471-002	1
9652	Pole Plate	23-06314-004	1
9653	Gasket	22-09461-001	1
9654	Cover	23-06317-001	1
9655	Bolt	6-02-053-080-1	2
9656	Brake Assy 230V	27-12041-005	1
	Brake Assy 460V	27-12041-006	1

FRAME 1

2-4

MAY 1983

R4 BRAKE SERIES B HOIST
DOUBLE DISC
2 HP MOTOR & UP

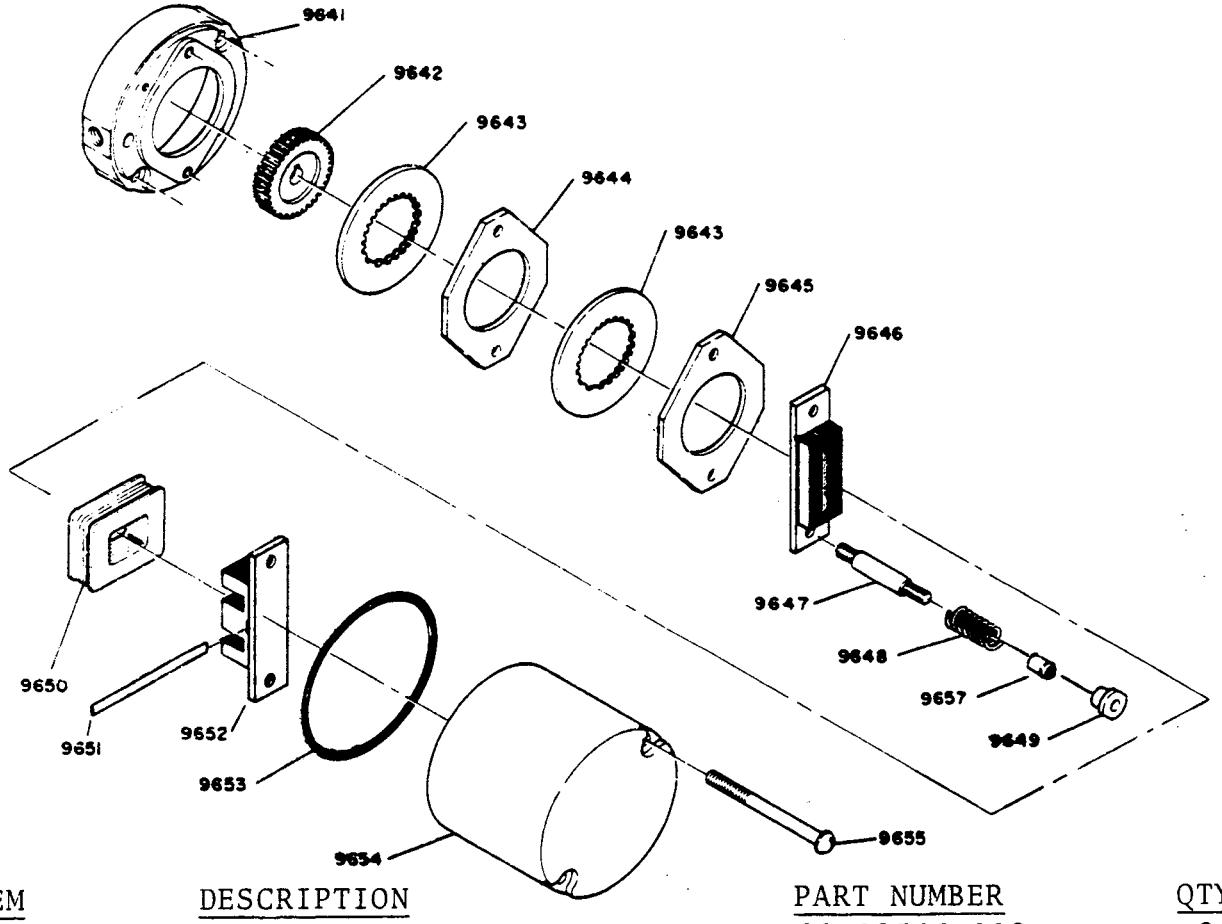

ITEM	DESCRIPTION	PART NUMBER	QTY
9657	Spacer	22-08546-002	2
9641	Adaptor	24-05379-002	1
9642	Hub	22-11627-002	1
9643	Disc	22-07965-002	2
9644	Intermediate Disc	23-06313-007	1
9645	Thrust Disc	23-06313-001	1
9646	Armature Plate	23-06374-003	1
9647	Stud	23-08072-001	2
9648	Spring	22-03615-010	2
9649	Adjusting Nut	22-08470-002	4
9650	Coil 230V	22-11698-001	1
	Coil 460V	22-11698-002	1
	Coil 575V	22-11698-003	1
9651	Wedge	22-08471-002	1
9652	Pole Plate	23-06314-004	1
9653	Gasket	22-09461-001	1
9654	Cover	23-06317-001	1
9655	Bolt	6-02-053-080-1	2
9656	*Brake Assy	21-03802-002	1

*Less Coil

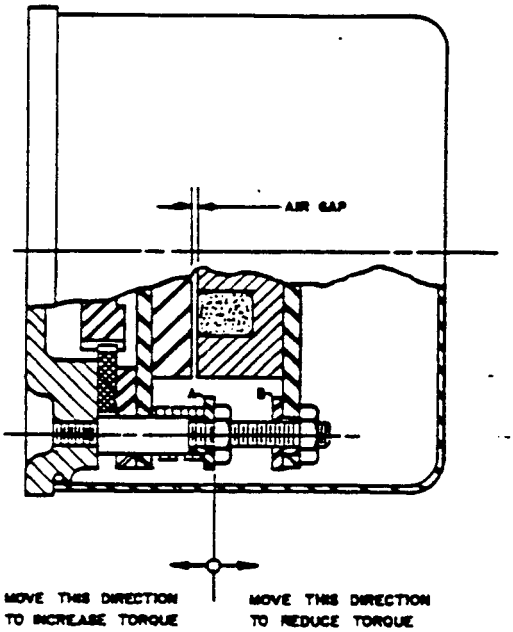

TORQUE ADJUSTMENT:

Brakes used on hoist motion drives are to be adjusted for maximum torque.

Brakes used on trolley and crane motion drives can be adjusted to provide stopping action to suit operations.

To adjust, loosen jam nuts at adjusting nuts "A" and adjust both sides equally as indicated by direction of arrows. Relock jam nuts after proper setting is determined.

WEAR ADJUSTMENT:

Loosen jam nuts at adjusting nuts "B" and adjust both sides to get uniform 1/32" (.031") air gap in magnet assembly. Relock jam nuts securely and recheck to insure proper air gap. Adjustment for wear is indicated when air gap exceeds 1/16". Friction disc should be replaced when worn to 1/8" thickness.

ELECTRICAL CONNECTIONS

When used as a replacement brake, the coil voltage should be the same as that of the old brake for proper operation.

When used as an add-on brake kit, connections may allow latitude in selection of brake coil voltage.

DIAGRAM I: Allows usage with dual voltage (230/460) motors and permits use of 230 volt brake coil for either line voltage. Brake coil lead connections are to be completed in the motor terminal box.

DIAGRAM II: Allows usage with dual voltage (230/460) motors, and must be used with single voltage motors. Brake coil voltage must equal line voltage. Brake coil lead connections are to be completed in the motor terminal box.

DIAGRAM III: Must be used on any installation where control system uses a startmaster or ballast resistor to cushion motor start. Brake coil voltage must equal line voltage. Wiring must be run to the control system such that the brake coil will receive full voltage.

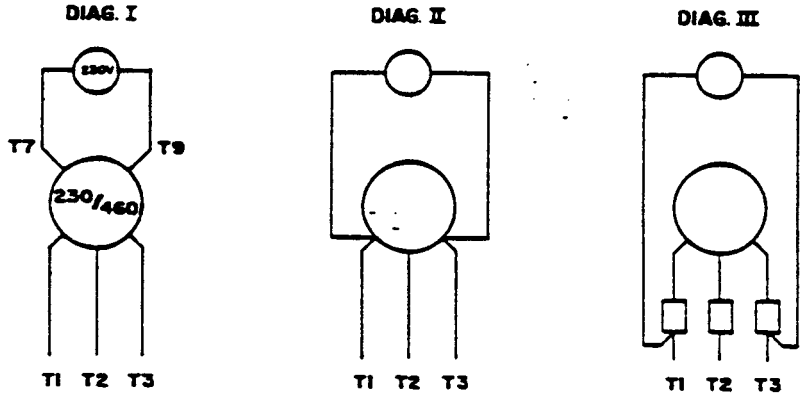

FRAME 1

3-1

FRAME & COMPONENTS

OCT 1982

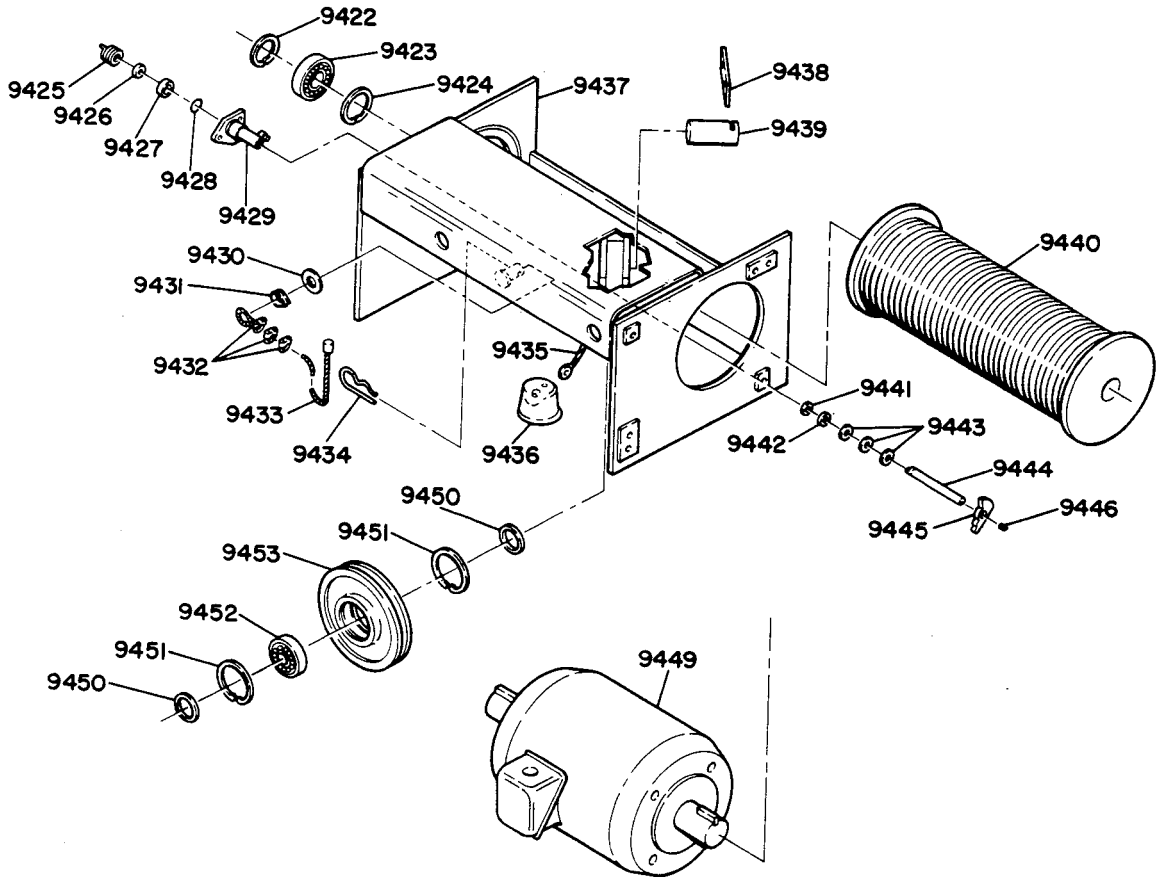

ITEM	DESCRIPTION	PART NUMBER	QTY
9422	Snap Ring	22-06497-010	1
9423	Ball Bearing	6-30-050-205-1	1
9424	Snap Ring	22-06497-004	1
9425	Spring	22-09449-001	1
9426	Retaining Ring	22-06497-007	1
9427	Bearing	6-30-102-007-0	1
9428	"O" Ring	Not Required	
9429	Mounting Bracket	22-08533-008	1
9430	Washer	6-23-003-009-1	1
9431	Rope Thimble	22-00306-001	1
9432	Rope Clips	22-00305-001	3
9433	Wire Rope	See Cable Section	1
9434	Pin	22-11646-001	1
9435	Limit Cable ½ & 1 Ton	22-09092-001	1
	Limit Cable 1½ Ton	22-09092-031	1
	Limit Cable 2 Ton	22-09092-042	1

FRAME & COMPONENTS

ITEM	DESCRIPTION	PART NUMBER	QTY
9436	Limit Weight	23-02305-701	1
9437	Main Frame		
	1st Length WO/MS/MSM	25-03127-001	1
	2nd Length WO/MS/MSM	25-03127-002	1
	1st Length W/MS/MSM	25-03127-003	1
	2nd Length W/MS/MSM	25-03127-004	1
9438	Keeper Plate	22-01800-004	1
9439	Sheave Pin	22-11645-001	1
9440	Rope Drum		
	1st Length	24-06091-001	1
	2nd Length	24-06091-002	1
9441	Ball Bearing	6-30-102-007-0	1
9442	Felt Washer	6-23-060-204-0	1
9443	Shim Washer	6-23-030-169-0	8
9444	Limit Switch Shaft		
	1st Length	22-09447-046	1
	2nd Length	22-09447-045	1
9445	Lever	23-06635-001	1
9446	Key	6-11-002-008-0	1
9449	Motor		
	1 HP 230/460V SS	23-07699-017	1
	1 HP 575V SS	23-07699-018	1
	2 HP 230/460V SS	23-08048-004	1
	2 HP 575V SS	23-08048-006	1
	1/.33 HP 230V 2-SP	23-07699-028	1
	1/.33 HP 460V 2-SP	23-07699-032	1
	1/.33 HP 575V 2-SP	23-07699-035	1
	2/.66 HP 230V 2-SP	23-08048-012	1
	2/.66 HP 460V 2-SP	23-08048-013	1
	2/.66 HP 575V 2-SP	23-08048-014	1
9450	Spacer	22-01948-023	2
9451	Snap Ring	22-06498-010	2
9452	Ball Bearing	6-30-050-205-1	1
9453	Sheave	22-11645-001	1
Not Shown	Limit Shaft Tube		
	1st Length	22-08538-045	1
	2nd Length	22-08538-046	1

FRAME 1

4-1

OCT 1982

HOIST GEAR CASE
1½ TON 2 HP MOTOR
4 PART 19.8 FPM

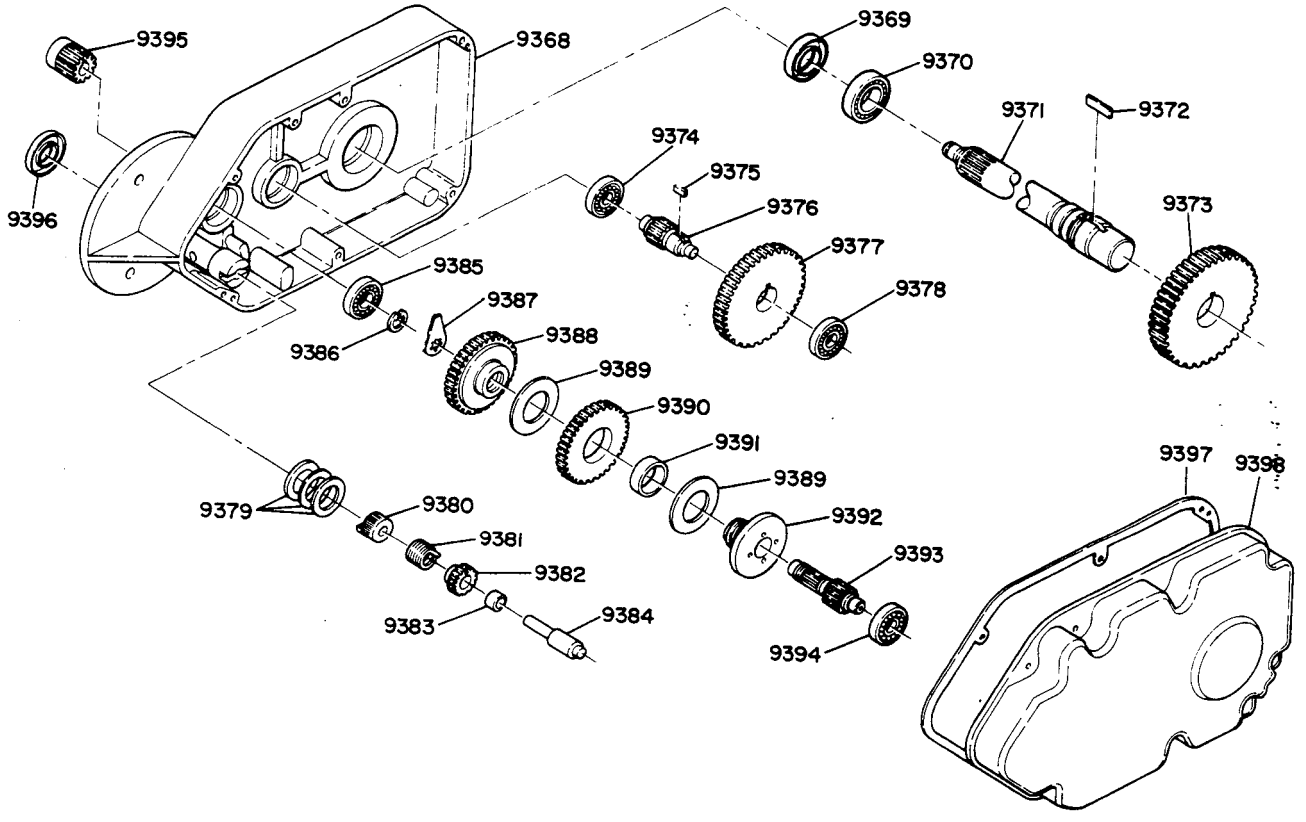

Reference 21-03756-001

ITEM	DESCRIPTION	PART NUMBER	QTY
9368	Gear Case	25-03119-003	1
9369	Oil Seal	22-09059-001	1
9370	Ball Bearing	6-30-041-210-0	1
9371	Drum Drive Shaft		
	1st Length	24-06093-001	1
	2nd Length	24-06093-002	1
9372	Key	6-11-030-016-0	1
9373	Drum Gear	24-06055-002	1
9374	Ball Bearing	6-30-041-205-0	1
9375	Key	6-11-026-012-0	1
9376	Drum Pinion	24-06069-002	1
9377	Intermediate Gear	24-06070-002	1
9378	Ball Bearing	6-30-041-204-0	1
9379	Spacer Washer	22-09474-001	3
9380	Clutch Spring Anchor	22-06487-001	1
9381	Spring	22-08648-001	1
9382	Clutch Pinion	22-08647-002	1

HOIST GEAR CASE
1½ TON 2 HP MOTOR
4 PART 19.8 FPM

FRAME 1

4-2

OCT 1982

ITEM	DESCRIPTION	PART NUMBER	QTY
9383	Bushing	22-06517-001	1
9384	Clutch Shaft	22-06455-003	1
9385	Ball Bearing	6-30-041-204-0	1
9386	Snap Ring	22 06497-010	1
9387	Reverse Lever	22-06458-002	1
9388	Spider Gear	24-06087-001	1
9389	Friction Disc	22-06456-001	2
9390	Ratchet Gear	23-05217-001	1
9391	Bushing	22-06457-001	1
9392	Thrust Disc	24-06086-001	1
9393	Intermediate Pinion	24-06071-002	1
9394	Ball Bearing	6-30-041-204-0	1
9395	Motor Pinion	24-06073-001	1
9396	Oil Seal	22-11635-001	1
9397	Gasket	24-06074-001	1
9398	Gear Case Cover	25-03120-002	1

FRAME 1

4-3

OCT 1982

HOIST GEAR CASE
½,1,2 TON
2 PART 30 FPM
4 PART 15 FPM

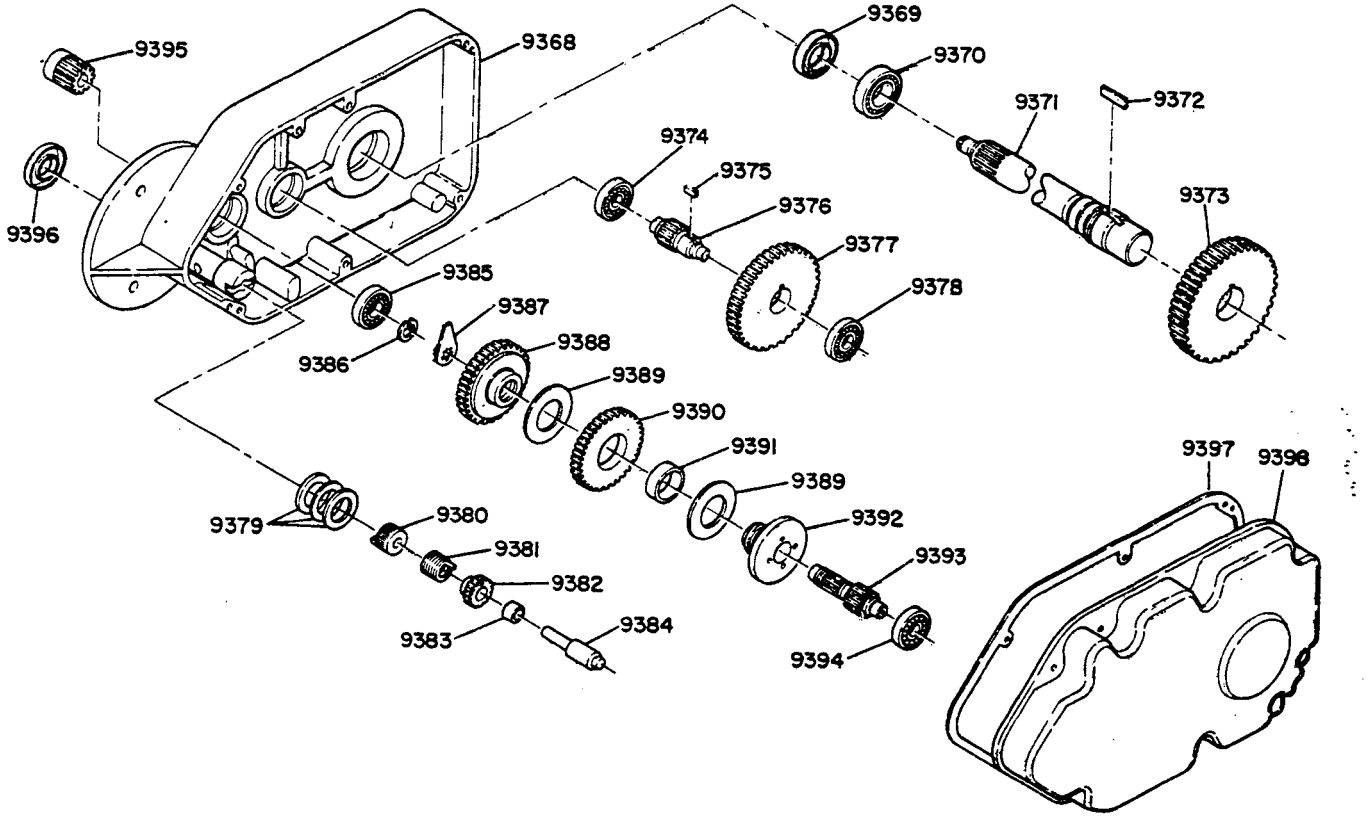

Reference 21-03756-002

ITEM	DESCRIPTION	PART NUMBER	QTY
9368	Gear Case	25-03119-003	1
9369	Oil Seal	22-09059-001	1
9370	Ball Bearing	6-30-041-210-0	1
9371	Drum Drive Shaft		
	1st Length	24-06093-001	1
	2nd Length	24-06093-002	1
9372	Key	6-11-030-016-0	1
9373	Drum Gear	24-06055-002	1
9374	Ball Bearing	6-30-041-205-0	1
9375	Key	6-11-026-012-0	1
9376	Drum Pinion	24-06069-002	1
9377	Intermediate Gear	24-06070-001	1
9378	Ball Bearing	6-30-041-204-0	1
9379	Spacer Washer	22-09474-001	3
9380	Clutch Spring Anchor	22-06487-001	1
9381	Spring	22-08648-001	1
9382	Clutch Pinion	22-08647-002	1

HOIST GEAR CASE
½,1,2 TON
2 PART 30 FPM
4 PART 15 FPM

FRAME 1

4-4

OCT 1982

ITEM	DESCRIPTION	PART NUMBER	QTY
9383	Bushing	22-06517-001	1
9384	Clutch Shaft	22-06455-003	1
9385	Ball Bearing	6-30-041-204-0	1
9386	Snap Ring	22-06497-010	1
9387	Reverse Lever	22-06458-002	1
9388	Spider Gear	24-06087-001	1
9389	Friction Disc	22-06456-001	2
9390	Ratchet Gear	23-05217-001	1
9391	Bushing	22-06457-001	1
9392	Thrust Disc	24-06086-001	1
9393	Intermediate Pinion	24-06071-001	1
9394	Ball Bearing	6-30-041-204-0	1
9395	Motor Pinion	24-06073-001	1
9396	Oil Seal	22-11635-001	1
9397	Gasket	24-06074-001	1
9398	Gear Case Cover	25-03120-002	1

FRAME 1

4-5

OCT 1982

HOIST GEAR CASE
1½ TON 1 HP MOTOR
4 PART 9.7 FPM

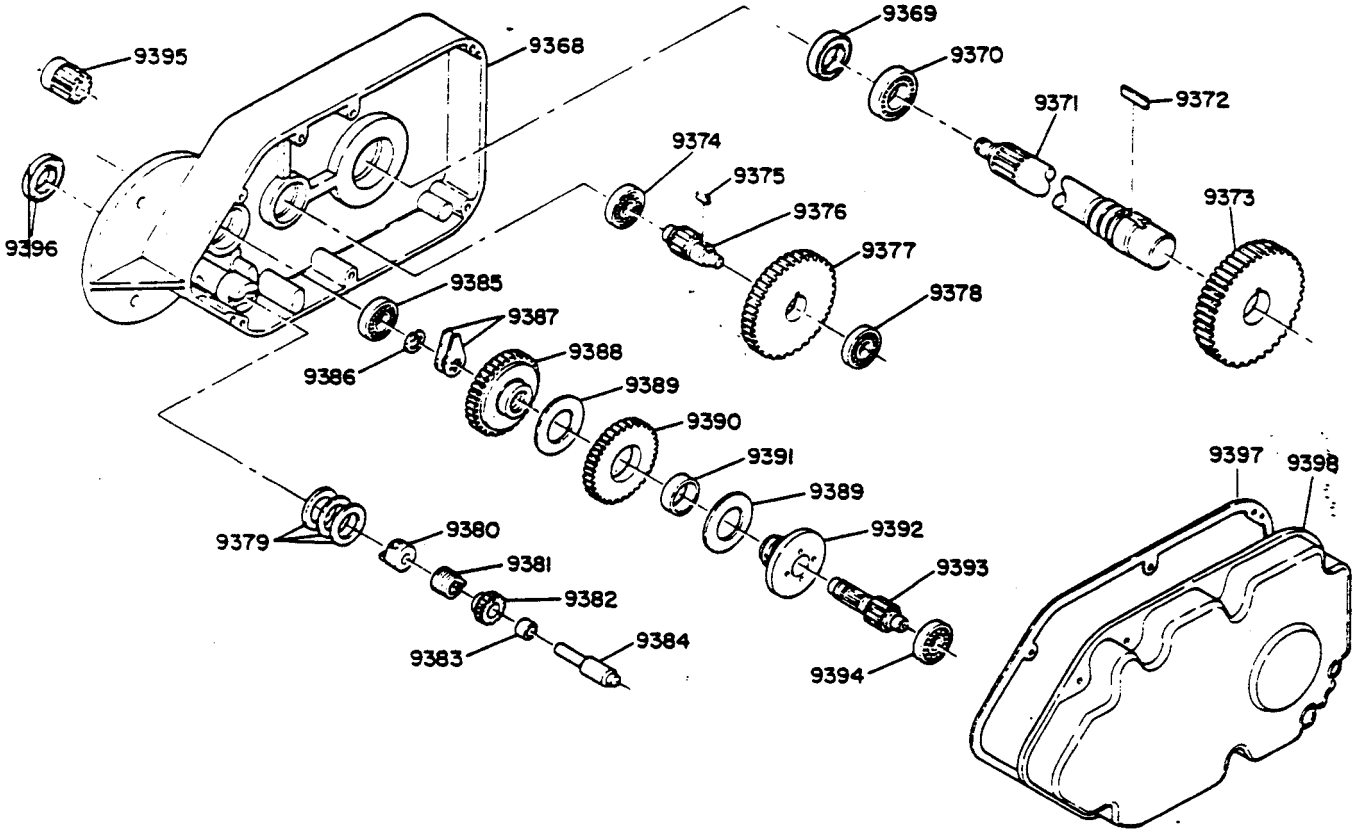

Reference 21-03756-003

ITEM	DESCRIPTION	PART NUMBER	QTY
9368	Gear Case	25-03119-003	1
9369	Oil Seal	22-09059-001	1
9370	Ball Bearing	6-30-041-210-0	1
9371	Drum Drive Shaft		
	1st Length	24-06093-001	1
	2nd Length	24-06093-002	1
9372	Key	6-11-030-016-0	1
9373	Drum Gear	24-06085-001	1
9374	Ball Bearing	6-30-041-205-0	1
9375	Key	6-11-026-012-0	1
9376	Drum Pinion	24-06069-001	1
9377	Intermediate Gear	24-06070-002	1
9378	Ball Bearing	6-30-041-204-0	1
9379	Spacer Washer	22-09474-001	3
9380	Clutch Spring Anchor	22-06487-001	1
9381	Spring	22-08648-001	1
9382	Clutch Pinion	22-08647-002	1

HOIST GEAR CASE
1½ TON 1 HP MOTOR
4 PART 9.7 FPM

ITEM	DESCRIPTION	PART NUMBER	QTY
9383	Bushing	22-06517-001	1
9384	Clutch Shaft	22-06455-003	1
9385	Ball Bearing	6-30-041-204-0	1
9386	Snap Ring	22-06497-010	1
9387	Reverse Lever	22-06458-002	1
9388	Spider Gear	24-06087-001	1
9389	Friction Disc	22-06456-001	2
9390	Ratchet Gear	23-05217-001	1
9391	Bushing	22-06457-001	1
9392	Thrust Disc	24-06086-001	1
9393	Intermediate Pinion	24-06071-002	1
9394	Ball Bearing	6-30-041-204-0	1
9395	Motor Pinion	24-06073-001	1
9396	Oil Seal	22-11635-001	1
9397	Gasket	24-06074-001	1
9398	Gear Case Cover	25-03120-002	1

FRAME 1

4-7

OCT 1982

HOIST GEAR CASE
1,2 TON 1 HP MOTOR
2 PART 14.8 FPM
4 PART 7.4 FPM

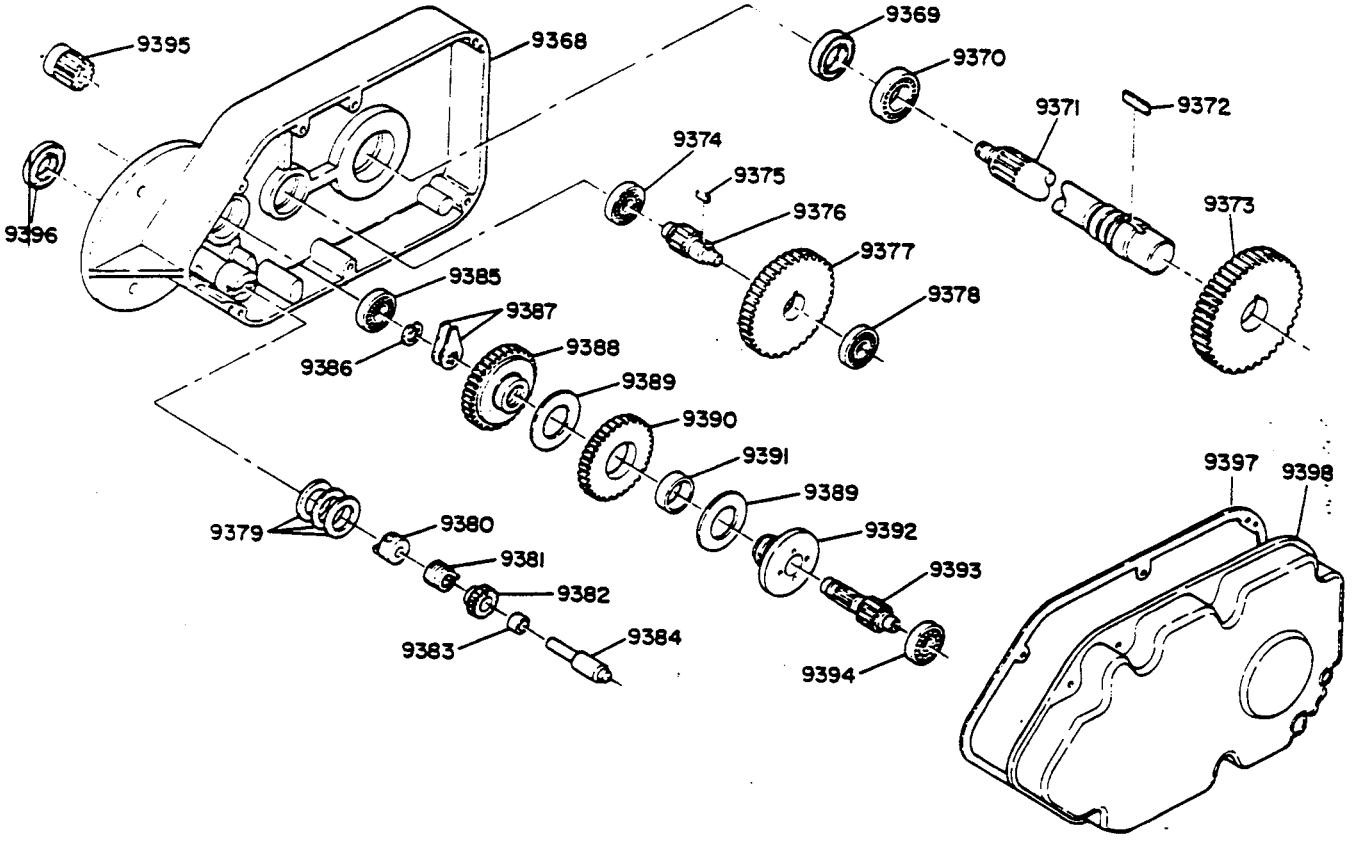

Reference 21-03756-004

ITEM	DESCRIPTION	PART NUMBER	QTY
9368	Gear Case	25-03119-003	1
9369	Oil Seal	22-09059-001	1
9370	Ball Bearing	6-30-041-210-0	1
9371	Drum Drive Shaft		
	1st Length	24-06093-001	1
	2nd Length	24-06093-002	1
9372	Key	6-11-030-016-0	1
9373	Drum Gear	24-06085-001	1
9374	Ball Bearing	6-30-041-205-0	1
9375	Key	6-11-026-012-0	1
9376	Drum Pinion	24-06069-001	1
9377	Intermediate Gear	24-06070 001	1
9378	Ball Bearing	6-30-041-204-0	1
9379	Spacer Washer	22-09474 001	3
9380	Clutch Spring Anchor	22-06487-001	1
9381	Spring	22-08648-001	1
9382	Clutch Pinion	22-08647-002	1

HOIST GEAR CASE
1,2 TON 1 HP MOTOR
2 PART 14.8 FPM
4 PART 7.4 FPM

FRAME 1

4-8

OCT 1982

ITEM	DESCRIPTION	PART NUMBER	QTY
9383	Bushing	22-06517-001	1
9384	Clutch Shaft	22-06455-003	1
9385	Ball Bearing	6-30-041-204-0	1
9386	Snap Ring	22-06497-010	1
9387	Reverse Lever	22-06458-002	1
9388	Spider Gear	24-06087-001	1
9389	Friction Disc	22-06456-001	2
9390	Ratchet Gear	23-05217-001	1
9391	Bushing	22-06457-001	1
9392	Thrust Disc	24-06086-001	1
9393	Intermediate Pinion	24-06071-001	1
9394	Ball Bearing	6-30-041-204-0	1
9395	Motor Pinion	24-06073-001	1
9396	Oil Seal	22-11635-001	1
9397	Gasket	24-06074-001	1
9398	Gear Case Cover	25-03120-002	1

LOAD BRAKE

Load Brake

All load brakes are self-adjusting and require a minimum of maintenance. Wear on friction disc should be checked during any gearcase maintenance. Replace discs when thickness reaches 1/32".

To adjust for disc wear, or reset after disc replacement, turn gear (left hand) down firmly against linings. Then assemble the reverse lever so the gap (see Figure 6-1a) is between 1/8" and 3/16".

The load brake should be checked for proper holding action after any load brake maintenance is performed.

To check to see whether load brake is holding properly, attach approximately a 25% capacity load to hook and raise off floor 6". Release motor brake by backing off adjusting nuts. Load should remain suspended. If load drifts to floor, check for malfunctioning spring clutch assembly or worn friction discs. Repair/replace as necessary.

NOTE: Severe impact or shock loads on hook due to improper handling of loads may result in a locked load brake. Load can be raised, but motor torque is not sufficient to unlock brake to permit lowering, and motor stalls. If load brake does not release after several inchings of the down button, the load must be removed from the hook before manual efforts are made to unlock the brake. It is recommended that the unlocking and subsequent inspection of the load brake be performed by a serviceman experienced in these areas.

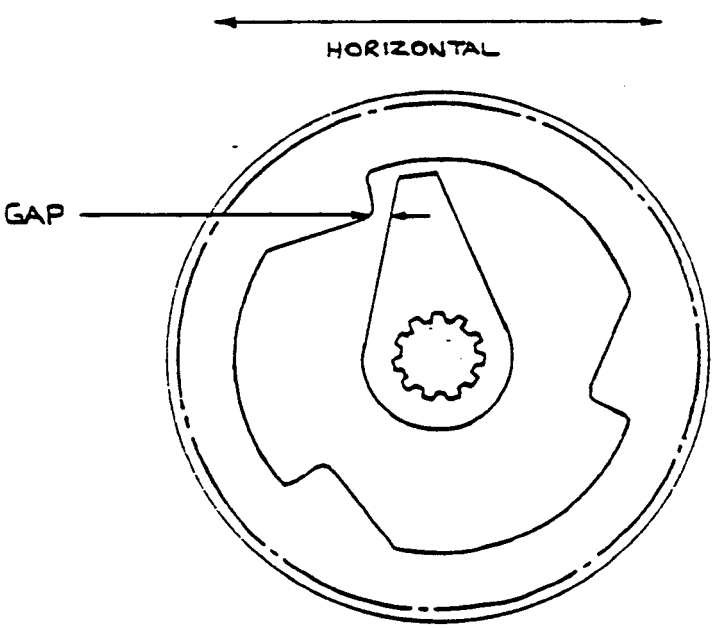

HOIST CONTROLS

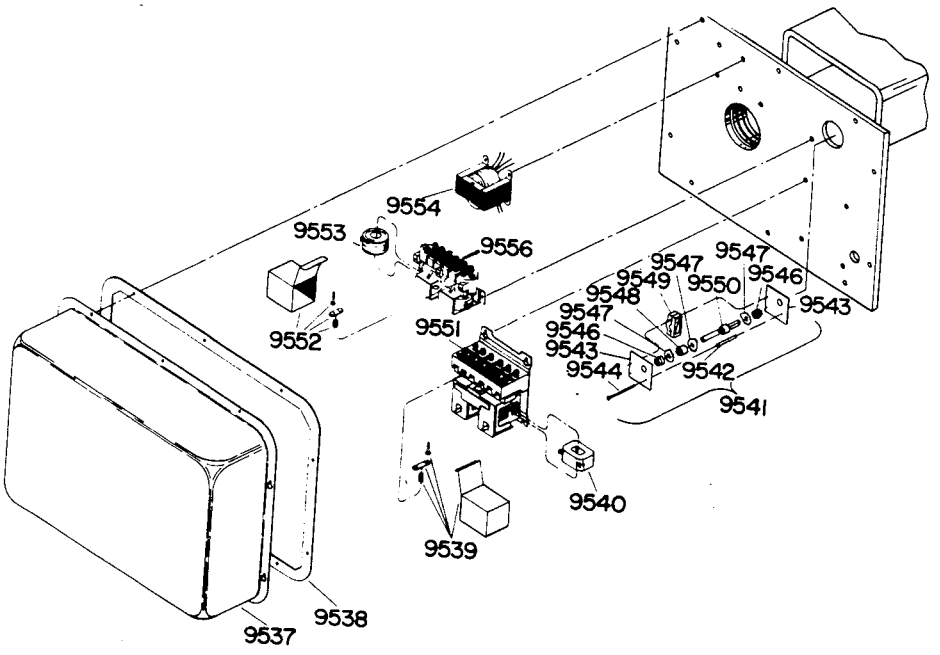

ITEM	DESCRIPTION	PART NUMBER	QTY
9537	Control Cover	24-06106-701	1
9538	Gasket	22-11655-002	1
9539	Contact Kit (Hoist)	22-09509-001	1
9540	Coil 24V (Hoist)	22-09507-006	1
	Coil 115V	22-09507-001	1
9541	Limit Switch Assembly		1
9542	Side Plate Spacer	22-08540-002	1
9543	Side Plate	22-08535-002	2
9544	Screw	6-19-152-121	2
9545	Bushing	22-08536-001	2
9547	Cam	22-08534-001	3
9548	Cam Spacer	22-08546-001	1
9549	Micro Switch	23-05987-003	3
9550	Limit Shaft	22-08539-002	1
9551	Hoist Controller	22-09494-001	1
9552	Contact Kit (Trolley)	22-09509-001	1
9553	Coil 24V (Trolley)	22-09507-006	2
	Coil 115V	22-09507-001	2
9554	Transformer		
	230/460V SS Hoist	23-07228-007	1
	575V SS Hoist	23-07228-008	1
	230/460V SS Hoist & Trolley	23-07228-051	1
	230/460V 2-SP Hoist SS Tr	23-07228-051	1
	575V SS Hoist & 2-SP Tr	23-07228-052	1
9555	Trolley Contactor	22-09494-001	1

FRAME 1

6-1 M TROLLEY

OCT 1982

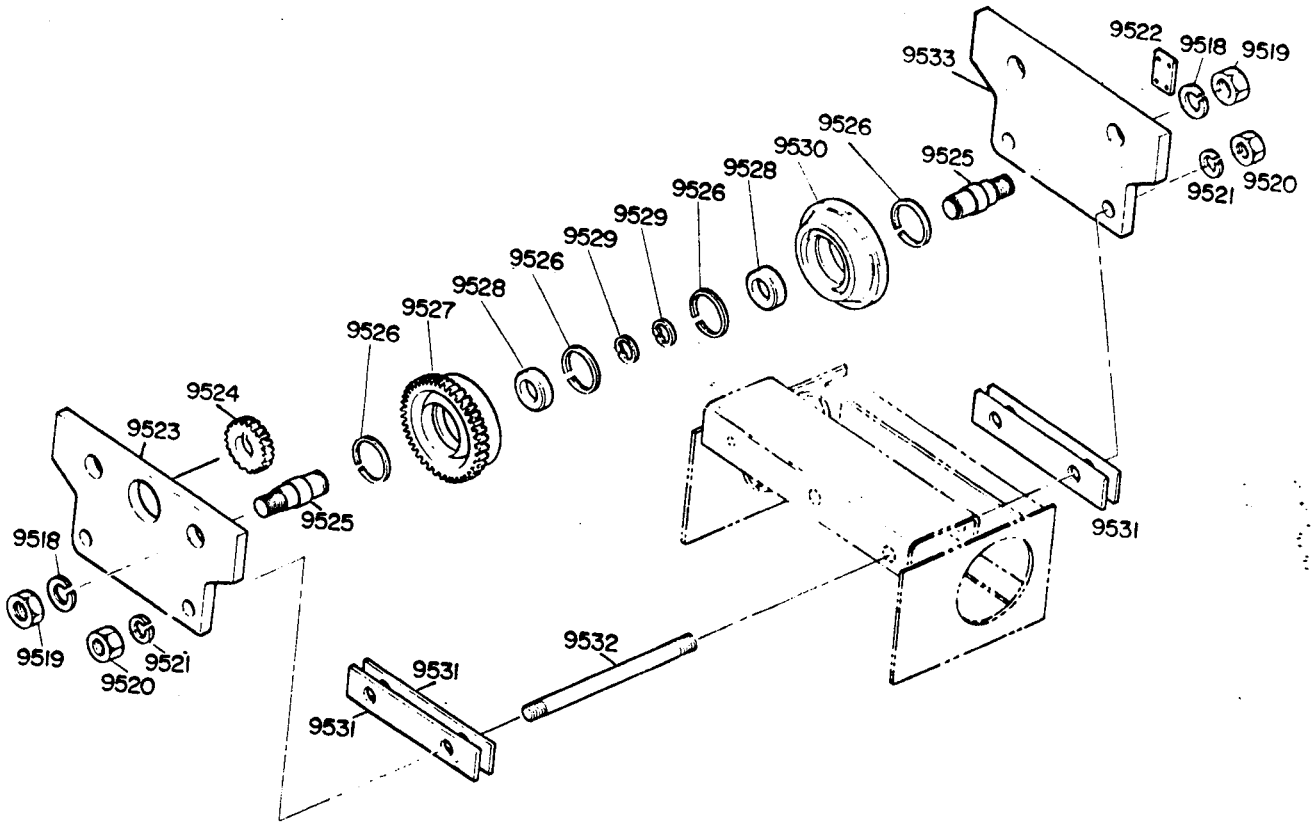

Reference 21-03745-001

ITEM	DESCRIPTION	PART NUMBER	QTY
9518	Lock Washer	6-23-001-055-0	4
9519	Hex Nut	6-14-008-032-0	4
9520	Hex Nut	6-14-007-010-0	4
9521	Lock Washer	6-23-001-051-0	4
9522	Clamp Plate	Not Required	
9523	Drive Side Plate	24-06058-001	1
9524	Drive Pinion	22-11628-001	1
	Pinion Key	6-11-024-034-0	1
	Pinion Set Screws	6-06-077-008-3	2
9525	Wheel Stud	22-11594-001	4
9526	Retaining Ring	22-06498-005	4
9527	Geared Wheel	23-08022-001	2
9528	Ball Bearing	6-30-050-206-1	4
9529	Retaining Ring	22-06497-003	4
9530	Idler Wheel	23-08022-002	2
9531	Spacer Plate	22-11595-001	26
9532	Mounting Stud	22-11596-001	2
9533	Idler Side Plate	24-06058-002	1

M TROLLEY
WITH PAT'D TRACK
FLAT TREAD WHEELS

FRAME 1

6-2

OCT 1982

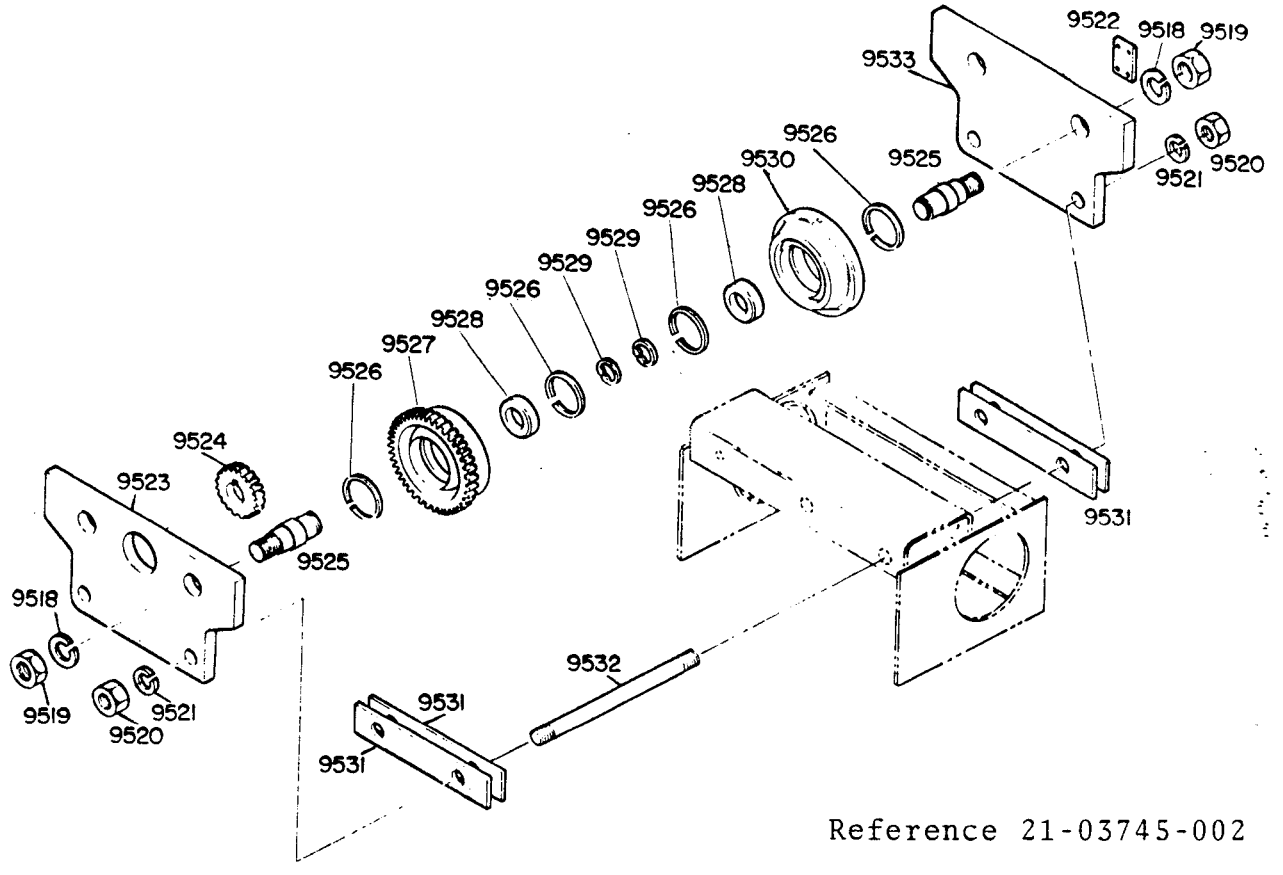

Reference 21-03745-002

ITEM	DESCRIPTION	PART NUMBER	QTY
9518	Lock Washer	6-23-001-055-0	4
9519	Hex Nut	6-14-008-032-0	4
9520	Hex Nut	6-14-007-010-0	4
9521	Lock Washer	6-23-001-051-0	4
9522	Clamp Plate	Not Required	
9523	Drive Side Plate	24-06058-001	1
9524	Drive Pinion	22-11628-001	1
	Pinion Key	6-11-024-034-0	1
	Pinion Set Screws	6-06-077-008-3	2
9525	Wheel Stud	22-11594-001	4
9526	Retaining Ring	22-06498-005	4
9527	Geared Wheel	23-08022-003	2
9528	Ball Bearing	6-30-050-206-1	4
9529	Retaining Ring	22-06497-003	4
9530	Idler Wheel	23-08022-004	2
9531	Spacer Plate	22-11595-001	26
9532	Mounting Stud	22-11596-001	2
9533	Idler Side Plate	24-06058-002	1

FRAME 1

6-3 B TROLLEY

OCT 1982

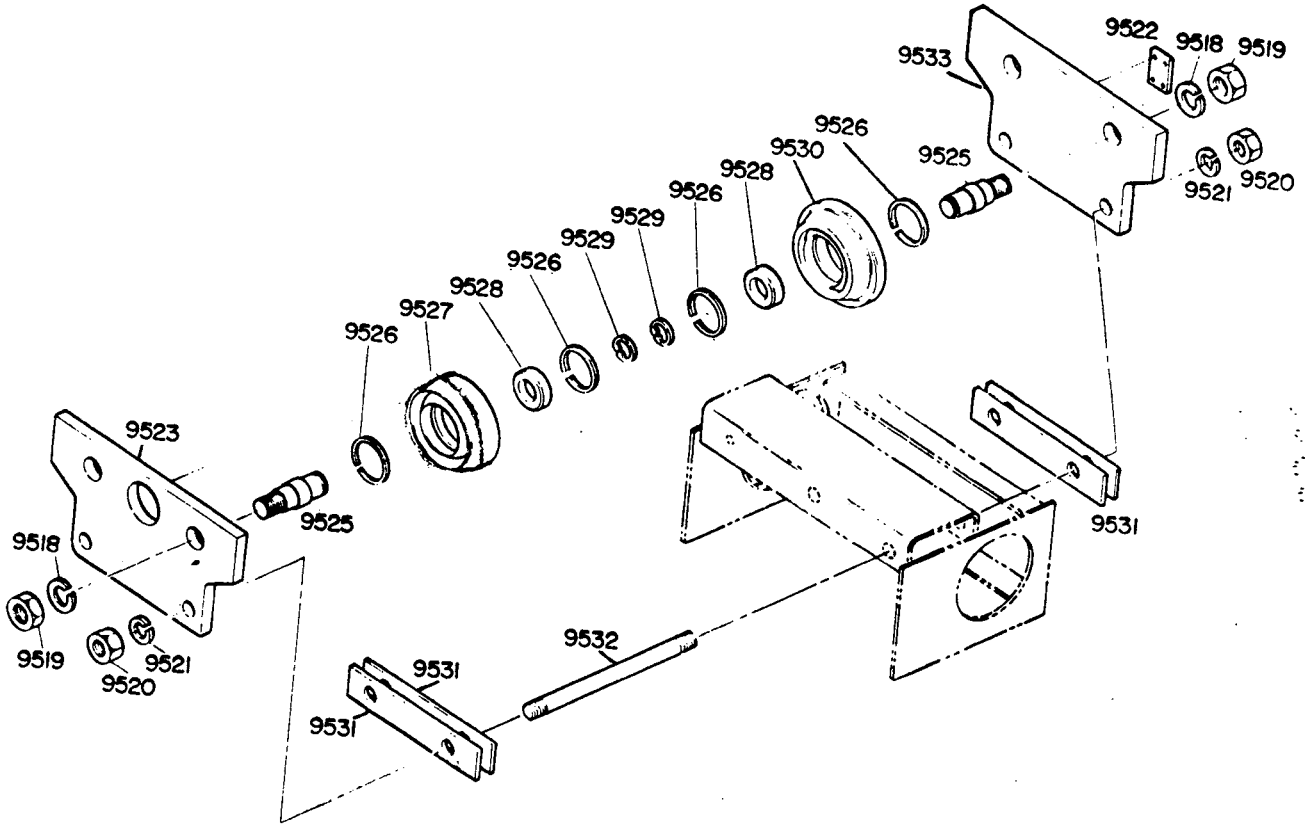

Reference 21-03746-001

ITEM	DESCRIPTION	PART NUMBER	QTY
9518	Lock Washer	6-23-001-055-0	4
9519	Hex Nut	6-14-008-032-0	4
9520	Hex Nut	6-14-007-010-0	4
9521	Lock Washer	6-23-001-051-0	4
9522	Clamp Plate	Not Required	
9523	Side Plate	24-06058-002	1
9525	Wheel Stud	22-11594-001	4
9526	Retaining Ring	22-06498-005	4
9527	Wheel	23-08022-002	2
9528	Ball Bearing	6-30-050-206-1	4
9529	Retaining Ring	22-06497-003	4
9530	Wheel	23-08022-002	2
9531	Spacer Plate	22-11595-001	26
9532	Mounting Stud	22-11596-001	2
9533	Side Plate	24-06058-002	1

B TROLLEY

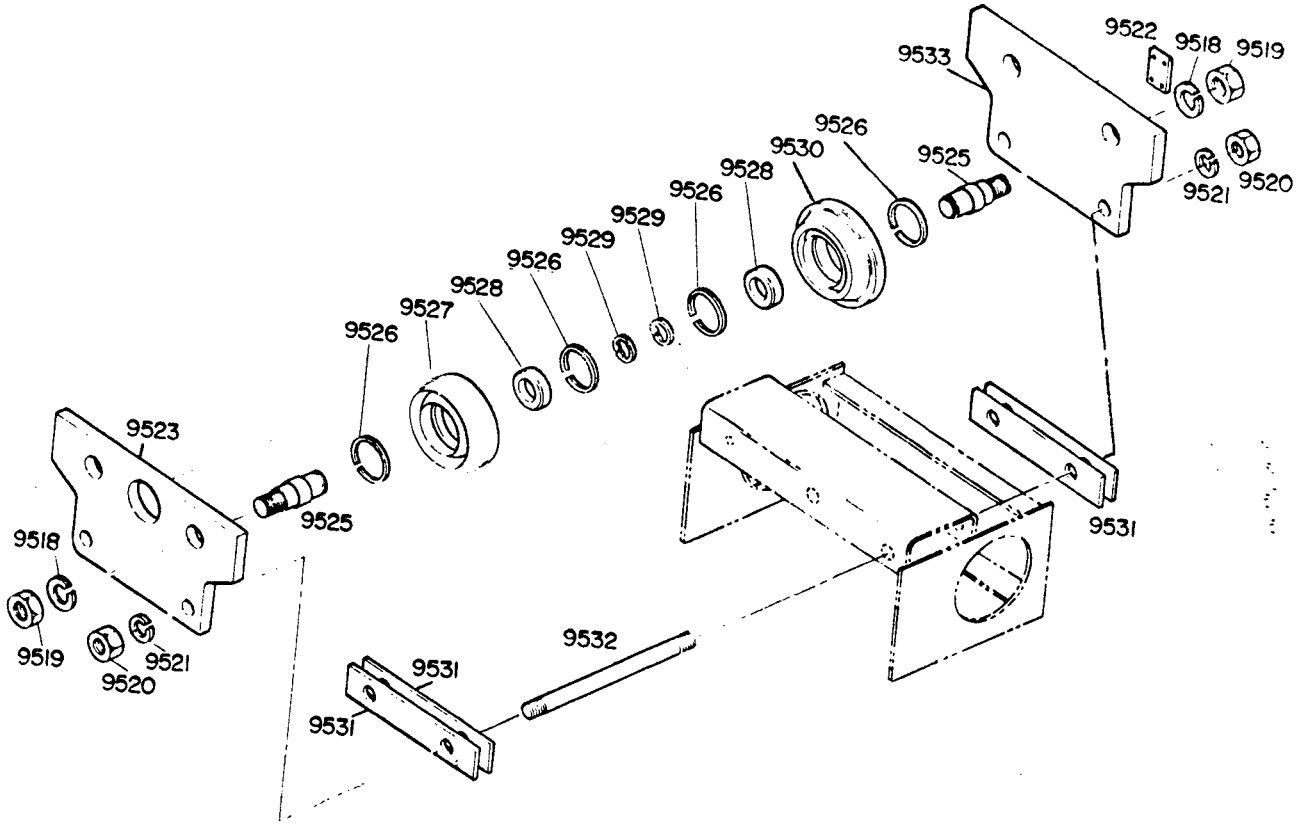

Reference 21-03746-002

ITEM	DESCRIPTION	PART NUMBER	QTY
9518	Lock Washer	6-23-001-055-0	4
9519	Hex Nut	6-14-008-032-0	4
9520	Hex Nut	6-14-007-010-0	4
9521	Lock Washer	6-23-001-051-0	4
9522	Clamp Plate	Not Required	
9523	Side Plate	24-06058-002	1
9525	Wheel Stud	22-11594-001	4
9526	Retaining Ring	22-06498-005	4
9527	Wheel	23-08022-004	2
9528	Ball Bearing	6-30-050-206-1	4
9529	Retaining Ring	22-06497-003	4
9530	Wheel	23-08022-004	2
9531	Spacer Plate	22-11595-001	26
9532	Mounting Stud	22-11596-001	2
9533	Side Plate	24-06058-002	1

FRAME 1

6-5 HAND GEARED TROLLEY

OCT 1982

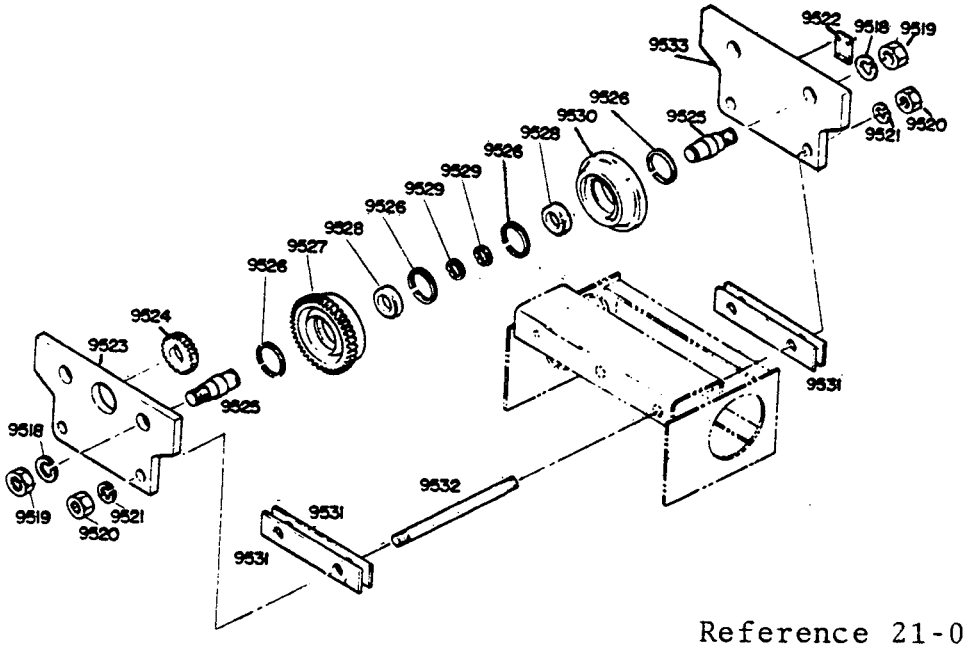

Reference 21-03765-001

ITEM	DESCRIPTION	PART NUMBER	QTY
9518	Lock Washer	6-23-001-055-0	4
9519	Hex Nut	6-14-008-032-0	4
9520	Hex Nut	6-14-007-010-0	4
9521	Lock Washer	6-23-001-051-0	4
9522	Clamp Plate	Not Required	
9523	Drive Side Plate	24-06058-001	1
9524	Drive Pinion	22-11628-001	1
	Pinion Key	6-11-024-034-0	1
	Pinion Set Screws	6-06-077-008-3	2
9525	Wheel Stud	22-11594-001	4
9526	Retaining Ring	22-06498-005	4
9527	Geared Wheel	23-08022-001	2
9528	Ball Bearing	6-30-050-206-1	4
9529	Retaining Ring	22-06497-003	4
9530	Idler Wheel	23-08022-002	2
9531	Spacer Plate	22-11595-001	26
9532	Mounting Stud	22-11596-001	2
9533	Idler Side Plate	24-06058-002	1
Not Shown	Shaft Bracket	23-07484-001	1
Not Shown	Shaft	23-07485-014	1
Not Shown	Chain Guard	24-00099-005	1
Not Shown	Hand Wheel	23-00007-004	1
Not Shown	Chain	22-00005-001	40 Ft

HAND GEARED TROLLEY WITH PAT'D TRACK

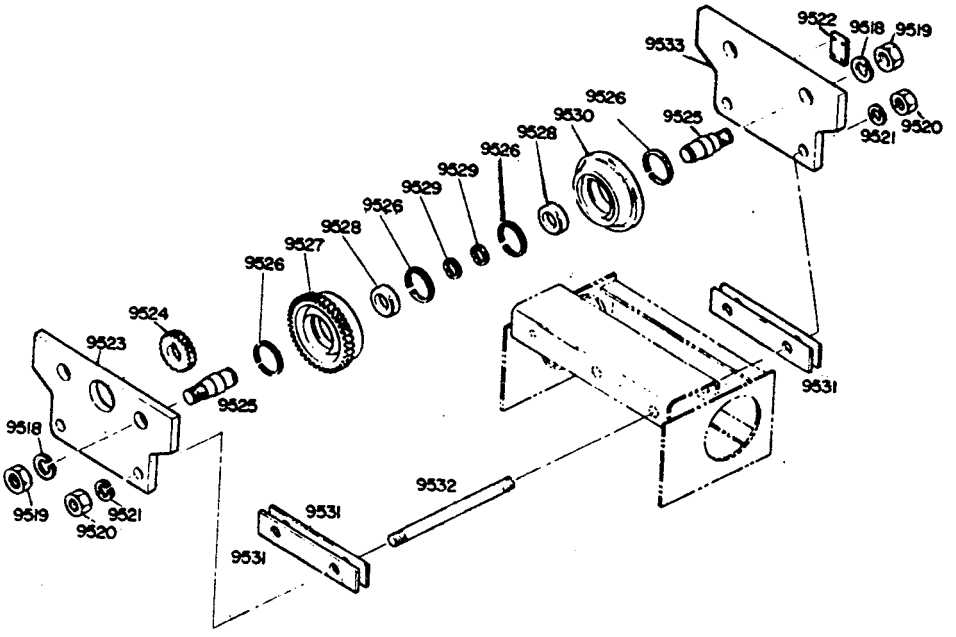

Reference 21-03765-002

ITEM	DESCRIPTION	PART NUMBER	QTY
9518	Lock Washer	6-23-001-055-0	4
9519	Hex Nut	6-14-008-032-0	4
9520	Hex Nut	6-14-007-010-0	4
9521	Lock Washer	6-23-001-051-0	4
9522	Clamp Plate	Not Required	
9523	Drive Side Plate	24-06058-001	1
9524	Drive Pinion	22-11628-001	1
	Pinion Key	6-11-024-034-0	1
	Pinion Set Screws	6-06-077-008-3	2
9525	Wheel Stud	22-11594-001	4
9526	Retaining Ring	22-06498-005	4
9527	Geared Wheel	23-08022-003	2
9528	Ball Bearing	6-30-050-206-1	4
9529	Retaining Ring	22-06497-003	4
9530	Idler Wheel	23-08022-004	2
9531	Spacer Plate	22-11595-001	26
9532	Mounting Stud	22-11596-001	2
9533	Idler Side Plate	24-06058-002	1
Not Shown	Shaft Bracket	23-07484-001	1
Not Shown	Shaft	23-07485-014	1
Not Shown	Chain Guard	24-00099-005	1
Not Shown	Hand Wheel	23-00007-004	1
Not Shown	Chain	22-00005-001	40 Ft

TROLLEY WHEEL SETTINGS

Trolley Wheel Setting

Trolleys designed to run on I-beams or WF sections (see Figure 6-2) must have wheel clearance such that there is approximately ⅛" clearance between wheel flange and rail with hoist/trolley centered on beam.

Note: If binding occurs while negotiating curves in track, trolley must be adjusted to provide $^1/_{16}$" maximum additional clearance between wheel and WF or I-beam flanges.

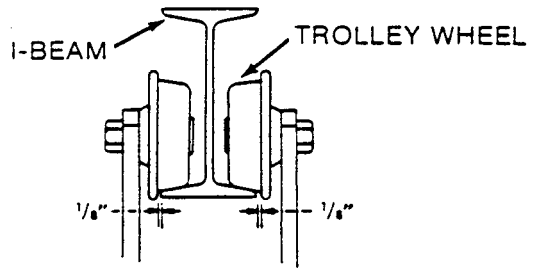

Figure 6-2

IMPORTANT

All spacers must be used, either inside or outside, to assure proper tightening of the trolley mounting studs. The same number of inside spacers must be used on each side to keep the hoist centered under the rail and maintain proper balance.

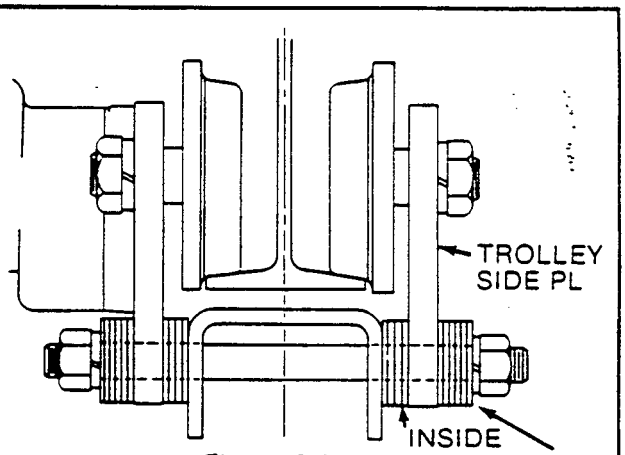

Figure 6-3a

Trolley Adjustment Procedure

To adjust wheel setting, spacers are provided at the trolley mounting studs (ref. Figure 6-3a). Placing additional spacers to the inside, between the trolley side plate and hoist load bar, will accommodate wider rail flanges. Removing spacers from the inside and placing them to the outside of the trolley side plates reduces the wheel spacing for smaller rail flanges.

Trolley Spacers

I-beam Flange		Inside
4⅝"		0-Each Side
5"		1-Each Side
5½"	EXAMPLE	4-Each Side
6"	SHOWN	6-Each Side
6¼"		7-Each Side
7"		10-Each Side

The above chart is a guide only. Due to mill tolerances on wide flange and I-beams, the number of spacers inside may vary. Trolley wheels must be spaced according to "Trolley Wheel Setting" per Fig. 6-2.

REFERENCE SHEET

ITEM	BASIC PARTS	SERIES A Model S1	SERIES B Model S1
9518-9536	Type "G" Trolley	6-5	6-5
9518-9536	Type "G" Trolley w/Pat'd Track Flat Tread Wheels	6-6	6-6
9537-9555	Hoist Controls	5-1	5-1
9641-9660	R4-A - 4.0 Motor Brake		2-3
9641-9660	R4A - 8.0 Motor Brake		2-4
9851-9865	Hoist Controls (Units Built After 9-1-83)		5-2
	2-Part Single Reeving	1-2	1-2
	4-Part Single Reeving	1-4	1-4
	Motor Brake Adjustment	2-5	2-5
	Load Brake Adjustment	4-9	4-9
	Trolley Wheel Setting	6-7	6-7

2 PART BOTTOM BLOCK
½ & 1 TON

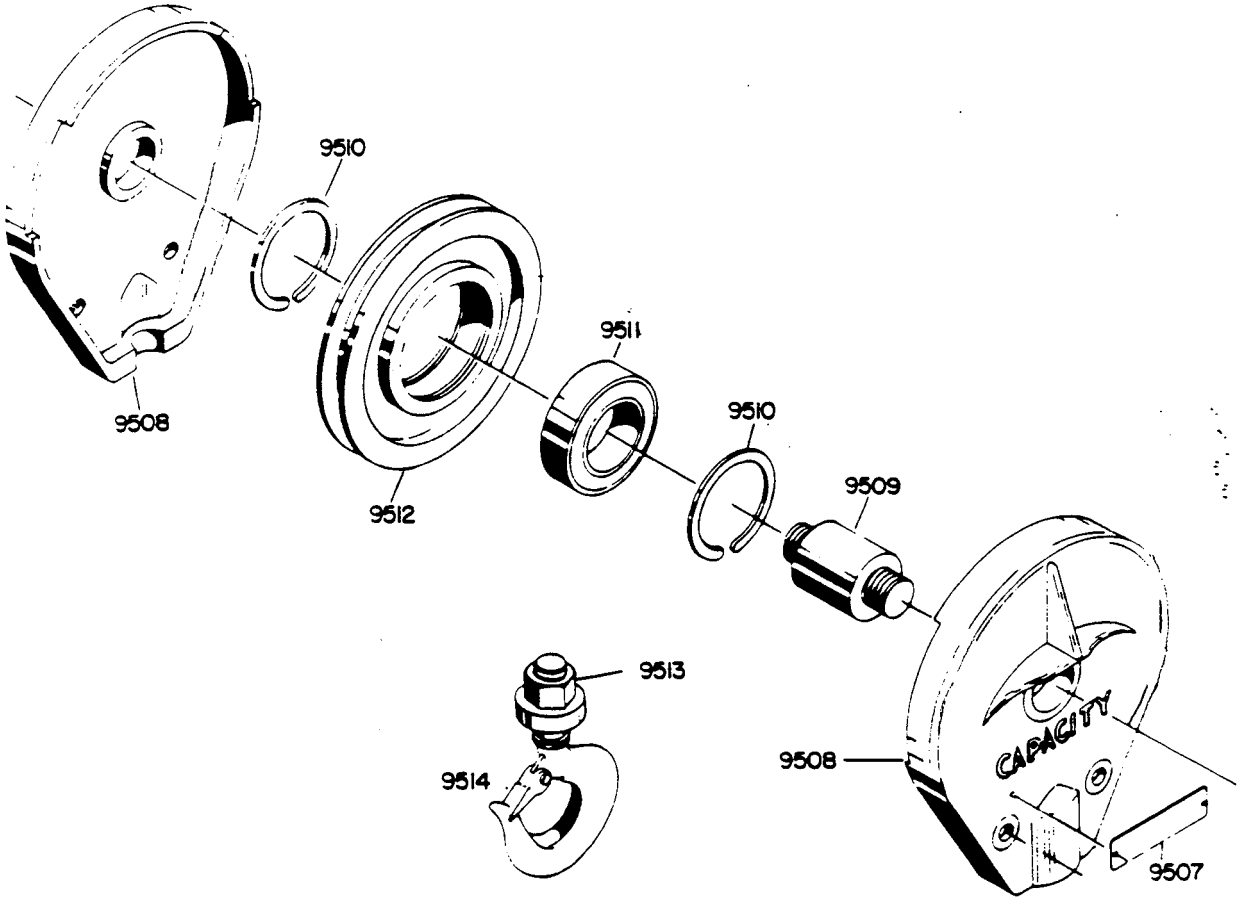

ITEM	DESCRIPTION	PART NUMBER	QTY
9507	Capacity Plate	22-06968-002	2
9508	Sheave Frame	24-04178-001	2
9509	Stud	22-06967-001	1
9510	Snap Ring	22-02244-013	2
9511	Bearing	6-30-050-205-1	1
9512	Sheave	23-05497-001	1
9513	Load Hook Assy	Not Available	
	Order Parts Separately		
	Hook	22-00875-001	1
	Nut	6-14-007-008-0	1
	Bearing	22-07602-001	1
9514	Latch Kit	22-09917-004	1
9515	Bottom Block Assy	24-04182-014	1

THIS MANUAL AND ITS CONTENTS ARE THE PROPERTY OF ROBBINS & MYERS, INC.

2 PART SINGLE REEVING DIAGRAM

2 Part Single Reeving Diagram Frame 1 Hoist

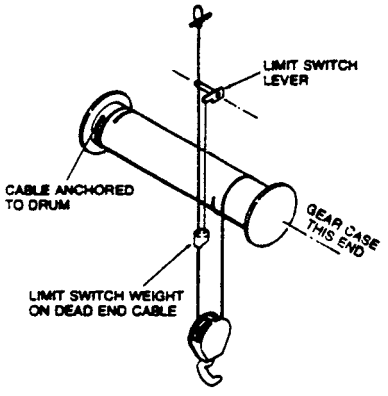

When the need for cable replacement has been established, proceed as follows:

CAUTION

Always wear heavy gloves when handling cables to avoid hand injuries from possible broken wires.

1. Run hoist in the down direction until only one half to one wrap of cable remains on the drum. Stop with drum in position where the keyhole slot anchoring the cable socket is most accessible.

2. Remove the rope clips and thimble from the dead end attachment and pull free cable end through, limit weight and block sheave. Free the socketed end of the cable from the hoist drum by removing plug from the keyhole slot. Discard old cable.

3. Inspect rope sheave, bearings, pin, etc. for wear or damage. Repair or replace as needed. *Note:* Placing a new cable in service in a sheave tracked or worn to a reduced groove radius will severely shorten cable life and can cause premature cable failure.

4. Unreel the replacement cable and inspect for any shipping damage, kinks, etc. Refer to Operation Maintenance Section — Wire Rope. If replacement cables are held in storage for extended periods of time, check for dried out lubricant or possible corrosion.

5. Place one half to one wrap of the socketed cable end around the drum, live cable leading off drum side nearest the motor. Place socket through the keyhole slot and replace plug, anchoring socket inside the drum.

6. Tighten plug securely, checking to make certain that surface of plug does not extend above bottom of rope groove in the drum.

7. Depending on the distance of the hoist to the floor, or surface where the block lies, it may be desirable to run the hoist (up direction) and wind part of the free cable onto the drum. Cable should be guided to ensure that it spools properly onto drum, and remaining free length of cable should be adequate to complete the reeving system with block lying on the floor.

8. If cable is to be threaded into the system without disassembly of the block, it will be helpful to tape a section of stiff wire to the free end of the cable. This "lead wire" can be formed to the sheave contour and rolled through the sheave, serving as a pilot to lead the cable into proper position.

9. Thus fitted, the free end, or live cable, from the drum is passed first into the block sheave, then through the hole in limit switch weight, and anchored to the dead end pin. Refer to reeving diagram. Make certain that rope clips are properly applied and tightened as outlined in the Operation Maintenance Section.

CAUTION

Make certain that limit switch weight is properly threaded onto dead end cable and operating freely. Safe operation of the hoist requires a properly operating limit switch mechanism.

10. Operate hoist up control to raise block from the floor. Check to be certain that sheave turns freely and that block hangs properly as shown in the reeving diagram.

11. Operate the block through the full range of lift for 2-3 cycles with empty hook. Check cables with block near the full up position to ensure they hang properly. Make 1-2 *short* lifts from the floor with a near capacity load. Follow this by retightening rope clips.

IMPORTANT

If equipped with optional geared limits, check and adjust limits as necessary to maintain original stop locations.

4 PART BOTTOM BLOCK
½ & 2 TON

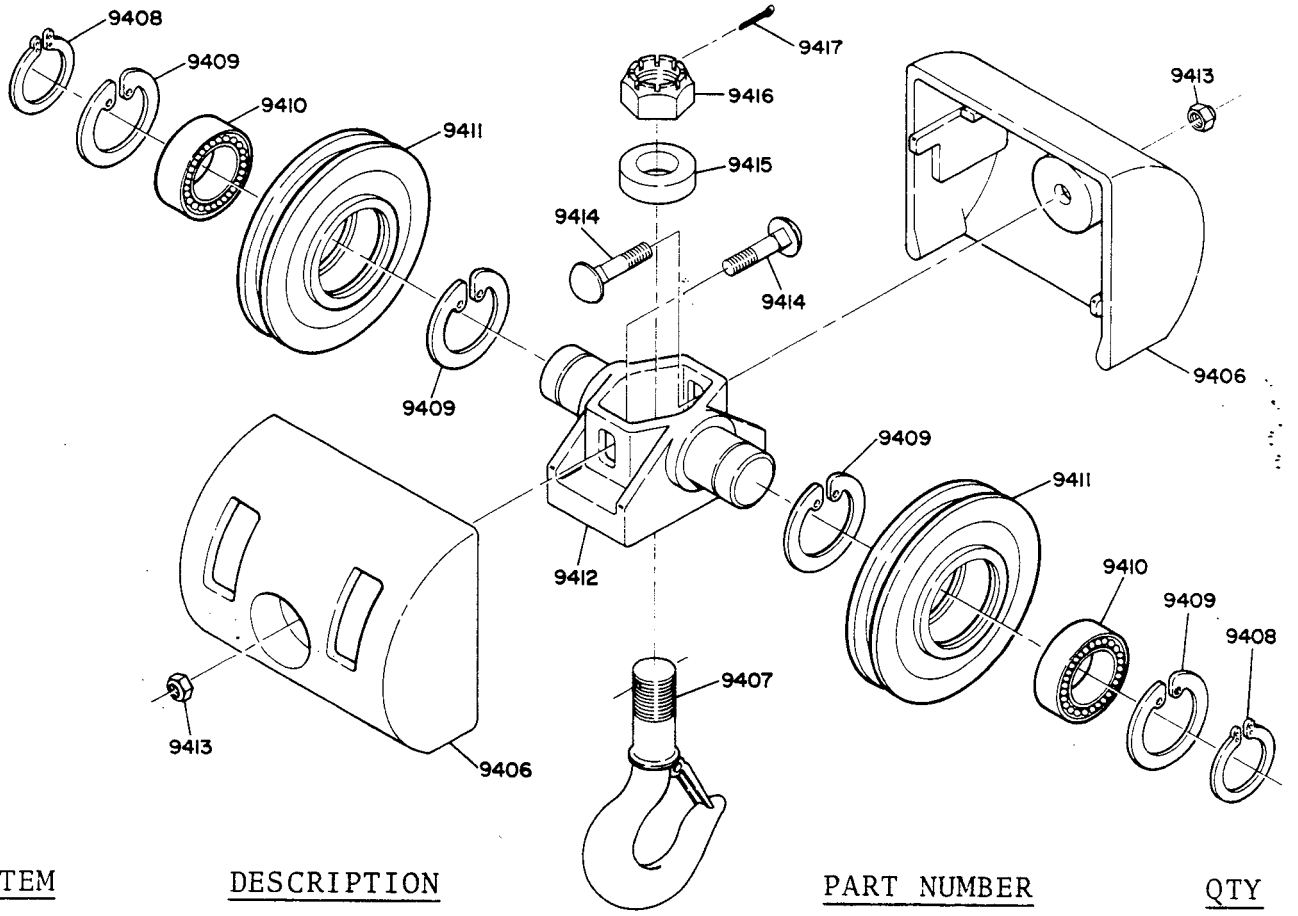

ITEM	DESCRIPTION	PART NUMBER	QTY
9406	Cover	24-06096-701	2
9407	Hook	23-00022-001	1
9408	Snap Ring	22-06497-010	2
9409	Snap Ring	22-06498-010	4
9410	Ball Bearing	6-30-050-205-1	2
9411	Sheave	23-08059-001	2
9412	Trunion	24-06095-001	1
9413	Hex Nut	22-11481-005	2
9414	Bolts	6-02-043-020-3	2
9415	Thrust Bearing	22-11701-001	1
9416	Load Nut	23-07796-009	1
9417	Cotter Pin	6-16-005-041-0	1
9418	Bottom Block Assembly	24-06094-001	1
	Latch Kit	22-09917-005	1
	Capacity Plate 1½ Ton	22-06968-004	2

4 PART SINGLE REEVING DIAGRAM

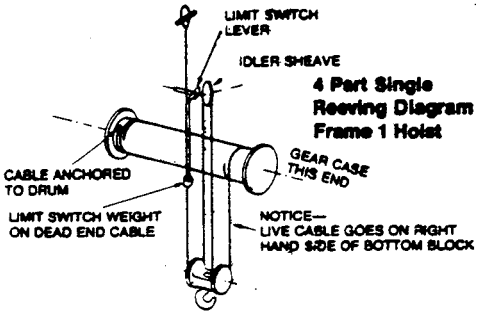

When the need for cable replacement has been established, proceed as follows:

CAUTION

Always wear heavy gloves when handling cables to avoid hand injuries from possible broken wires.

1. Run block to the floor and lay on its side with axis of sheaves parallel to axis of hoist drum. Continue to run hoist in the down direction until only one half to one wrap of cable remains on the drum. Stop with drum in position where the keyhole slot anchoring the cable socket is most accessible.

2. Remove the rope clips and thimble from the dead end attachment and pull free cable end through limit weight, sheaves, etc. Free the socketed end of the cable from the hoist drum by removing plug from the keyhole slot. Discard old cable.

3. Inspect rope sheaves, bearings, pins, etc. for wear or damage. Repair or replace as needed. *Note:* Placing a new cable in service in a sheave tracked or worn to a reduced groove radius will severely shorten cable life and can cause premature cable failure.

4. Unreel the replacement cable and inspect for any shipping damage, kinks, etc. Refer to Operation Maintenance Section — Wire Rope. If replacement cables are held in storage for extended periods of time, check for dried out lubricant or possible corrosion.

5. Place one half to one wrap of the socketed cable end around the drum, live cable leading off drum side nearest the motor. Place socket through the keyhole slot and replace plug, anchoring socket inside the drum.

6. Tighten plug securely, checking to make certain that surface of plug does not extend above bottom of rope groove in the drum.

7. Depending on the distance of the hoist to the floor, or surface where the block lies, it may be desirable to run the hoist (up direction) and wind part of the free cable onto the drum. Cable should be guided to ensure that it spools properly onto drum, and remaining free length of cable should be adequate to complete the reeving system with block lying on the floor.

8. If cable is to be threaded into the system without disassembly of the block or idler sheaves, it will be helpful to tape a section of stiff wire to the free end of the cable. This "lead wire" can be formed to the sheave contour and rolled through the sheaves, serving as a pilot to lead the cable into proper position.

9. Thus fitted, the free end, or live cable, from the drum is passed first into the block sheave at gearcase end, drum side, second, into the idler sheave, motor side, and third, into the block sheave at control end, drum side. Refer to reeving diagram.

10. Pass cable through the hole in limit switch weight and anchor to the dead end pin. Make certain that rope clips are properly applied and tightened as outlined in the Operation Maintenance Section.

CAUTION

Make certain that limit switch weight is properly threaded onto dead end cable and operating freely. Safe operation of the hoist requires a properly operating limit switch mechanism.

11. Operate hoist up control to raise block from the floor. Check to be certain that all sheaves turn freely and that block hangs properly as shown in the reeving diagram.

12. Operate the block through the full range of lift for 2-3 cycles with empty hook. Check cables with block near the full up position to ensure they hang properly. Make 1-2 *short* lifts from the floor with a near capacity load. Follow this by retightening rope clips.

IMPORTANT

If equipped with optional geared limits, check and adjust limits as necessary to maintain original stop locations.

M4 BRAKE SERIES A HOIST
SINGLE DISC
1 HP MOTOR & UNDER

▷ Old style parts may not be available. If unavailable, brake may be serviced by converting to a new style type R4 brake.

230 Volt "M to R" kit	27-12041-007
460 Volt "M to R" kit	27-12041-008

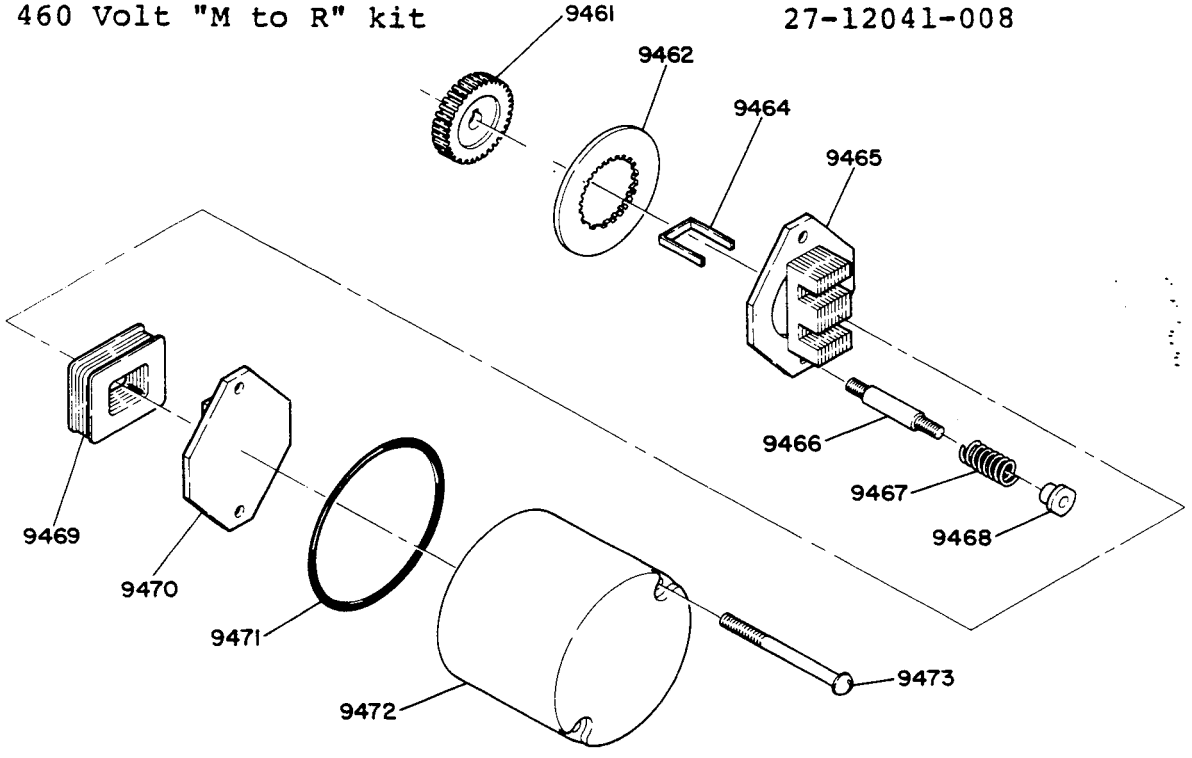

	ITEM	DESCRIPTION	PART NUMBER	QTY
		Brake Assy 230V	27-12041-003	1
		Brake Assy 460V	27-12041-004	1
	9461	Brake Hub	22-11627-002	1
	9462	Friction Disc	22-07965-002	1
▷	9464	Coil Support	22-08471-001	1
▷	9465	Pole Plate Assy	23-06314-001	1
▷	9466	Brake Stud	23-03645-021	2
	9467	Spring	22-03615-010	2
	9468	Adjusting Sleeve	22-08470-002	4
▷	9469	Coil 230V	22-08269-001	1
		Coil 460V	22-08269-006	1
		Coil 575V	22-08269-005	1
▷	9470	Armature Plate Assy	23-06374-001	1
	9471	"O" Ring Seal	22-09461-001	1
	9472	Brake Cover	23-06312-001	1
	9473	Cover Stud	6-02-053-080-1	2

FRAME 1

2-2

MAY 1983

M4 BRAKE SERIES A HOIST
DOUBLE DISC
2 HP MOTOR & UP

▷ Old style parts may not be available. If unavailable, brake may be serviced by converting to a new style type R4 brake.

230 Volt "M to R" kit	27-12041-007
460 Volt "M to R" kit	27-12041-008

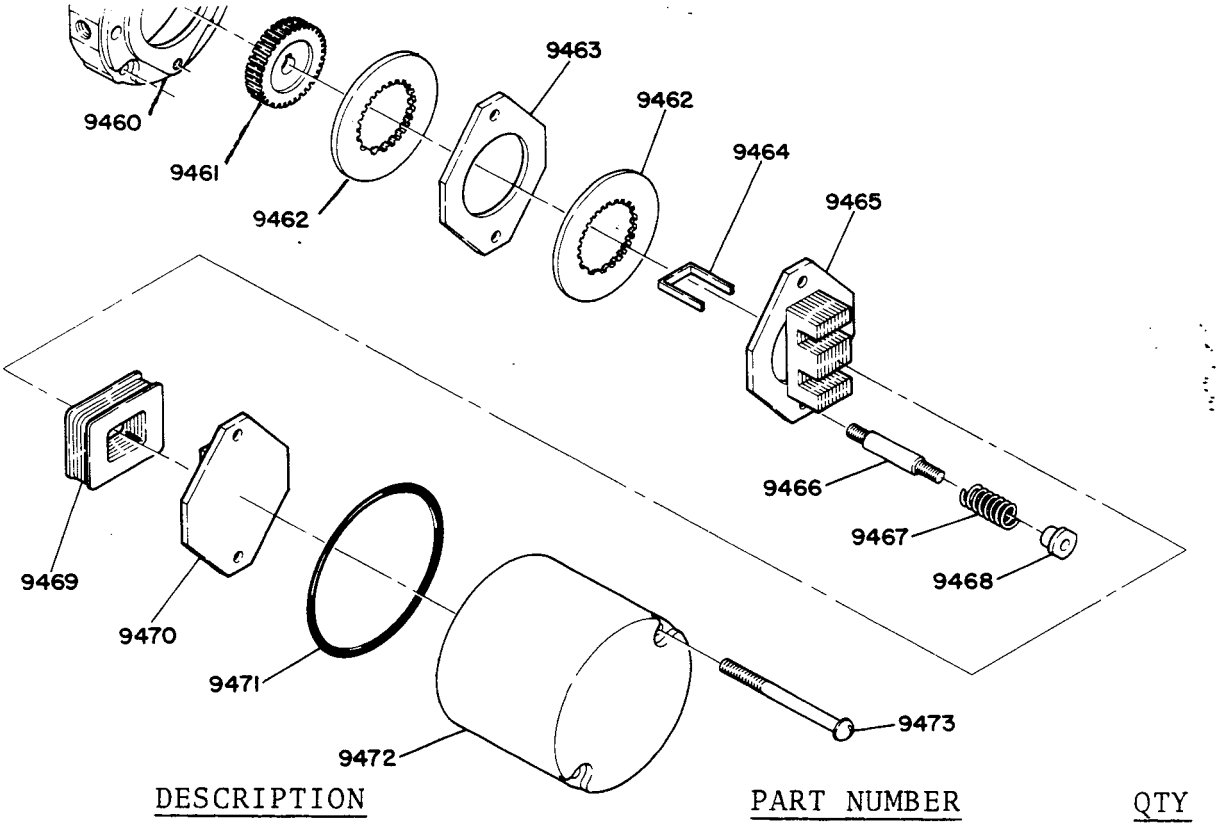

ITEM	DESCRIPTION	PART NUMBER	QTY
9460	Adaptor	24-05379-002	1
9461	Hub	22-11627-002	1
9462	Friction Disc	22-07965-002	2
9463	Thrust Disc	23-06313-007	1
▷ 9464	Coil Support	22-08471-001	1
▷ 9465	Pole Plate Assy	23-06314-001	1
▷ 9466	Stud	23-03645-021	2
9467	Spring	22-03615-010	2
9468	Adjusting Nut	22-08470-002	4
▷ 9469	Coil 230V	22-08269-001	1
	Coil 460V	22-08269-006	1
	Coil 575V	22-08269-005	1
▷ 9470	Armature Plate	23-06374-001	1
9471	"O" Ring Seal	22-09461-001	1
9472	Cover	23-06312-001	1
9473	Cover Stud	6-02-053-080-1	1
	Complete Brake Assy	21-03755-002	1

R4 BRAKE SERIES B HOIST
SINGLE DISC
1 HP MOTOR & UNDER

FRAME 1

2-3

OCT 1982

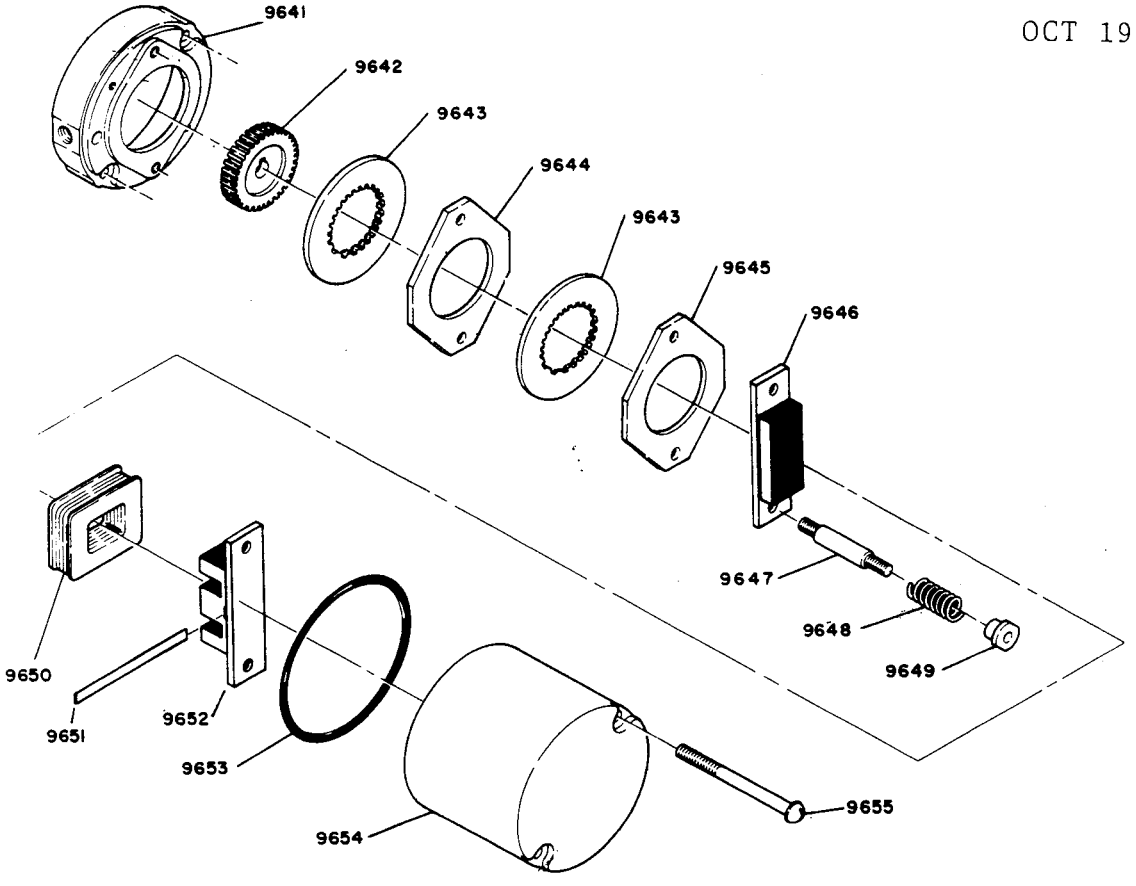

ITEM	DESCRIPTION	PART NUMBER	QTY
9641	Adaptor	24-05379-002	1
9642	Hub	22-11627-001	1
9643	Disc	22-07965-002	1
9644	Intermediate Disc	Not Required	
9645	Thrust Disc	23-06313-001	1
9646	Armature Plate	23-06374-003	1
9647	Stud	23-08072-001	2
9648	Spring	22-03615-010	2
9649	Adjusting Nut	22-08470-002	4
9650	Coil 230V	22-11698-001	1
	Coil 460V	22-11698-002	1
	Coil 575V	22-11698-003	1
9651	Wedge	22-08471-002	1
9652	Pole Plate	23-06314-004	1
9653	Gasket	22-09461-001	1
9654	Cover	23-06317-001	1
9655	Bolt	6-02-053-080-1	2
9656	Brake Assy 230V	27-12041-005	1
	Brake Assy 460V	27-12041-006	1

FRAME 1

2-4

MAY 1983

R4 BRAKE SERIES B HOIST
DOUBLE DISC
2 HP MOTOR & UP

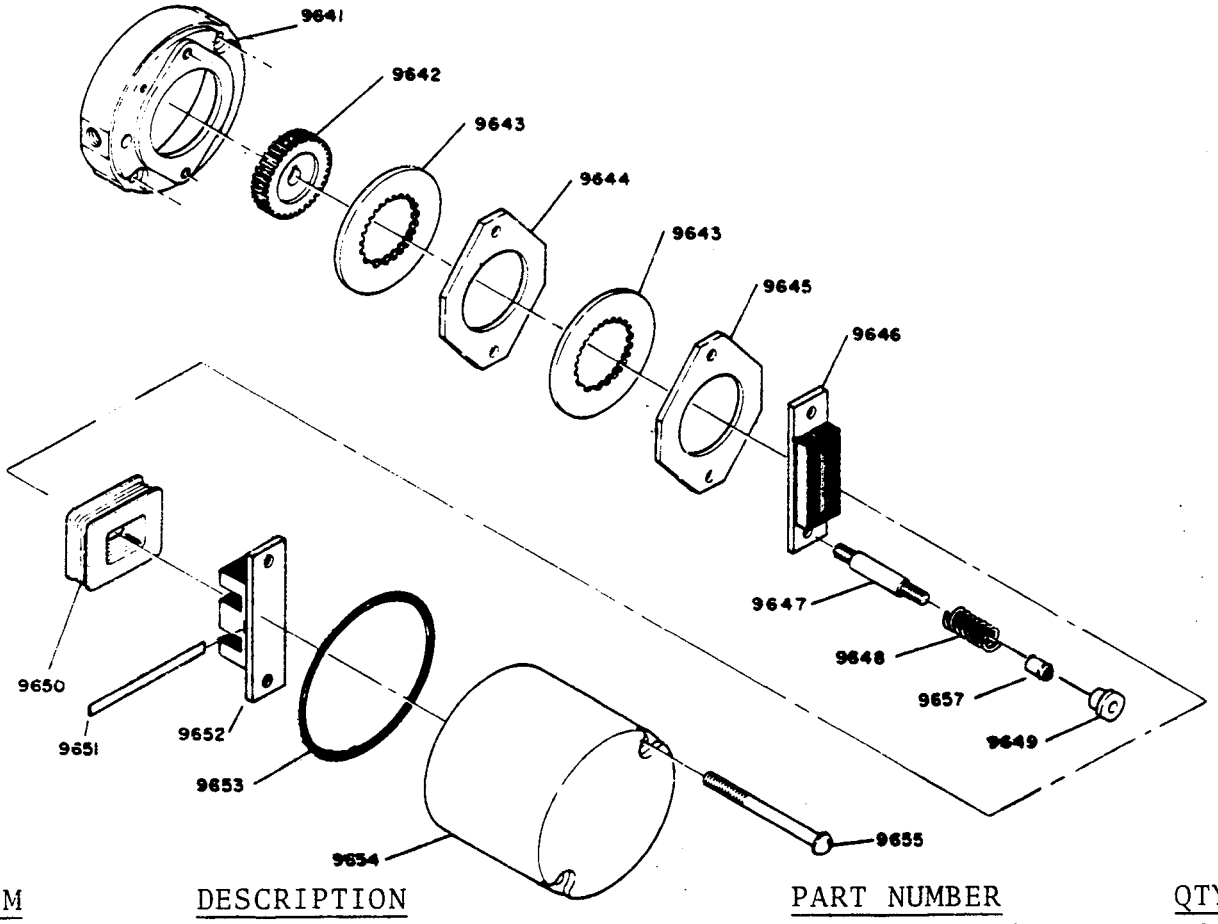

ITEM	DESCRIPTION	PART NUMBER	QTY
9657	Spacer	22-08546-002	2
9641	Adaptor	24-05379-002	1
9642	Hub	22-11627-002	1
9643	Disc	22-07965-002	2
9644	Intermediate Disc	23-06313-007	1
9645	Thrust Disc	23-06313-001	1
9646	Armature Plate	23-06374-003	1
9647	Stud	23-08072-001	2
9648	Spring	22-03615-010	2
9649	Adjusting Nut	22-08470-002	4
9650	Coil 230V	22-11698-001	1
	Coil 460V	22-11698-002	1
	Coil 575V	22-11698-003	1
9651	Wedge	22-08471-002	1
9652	Pole Plate	23-06314-004	1
9653	Gasket	22-09461-001	1
9654	Cover	23-06317-001	1
9655	Bolt	6-02-053-080-1	2
9656	*Brake Assy	21-03802-002	1

*Less Coil

M4 MOTOR BRAKE
R4 MOTOR BRAKE

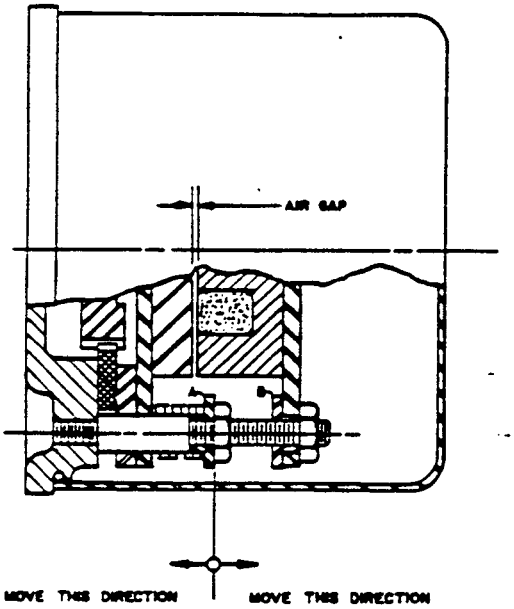

TORQUE ADJUSTMENT:

Brakes used on hoist motion drives are to be adjusted for maximum torque.

Brakes used on trolley and crane motion drives can be adjusted to provide stopping action to suit operations.

To adjust, loosen jam nuts at adjusting nuts "A" and adjust both sides equally as indicated by direction of arrows. Relock jam nuts after proper setting is determined.

WEAR ADJUSTMENT:

Loosen jam nuts at adjusting nuts "B" and adjust both sides to get uniform 1/32" (.031") air gap in magnet assembly. Relock jam nuts securely and recheck to insure proper air gap. Adjustment for wear is indicated when air gap exceeds 1/16". Friction disc should be replaced when worn to 1/8" thickness.

ELECTRICAL CONNECTIONS

When used as a replacement brake, the coil voltage should be the same as that of the old brake for proper operation.

When used as an add-on brake kit, connections may allow latitude in selection of brake coil voltage.

DIAGRAM I: Allows usage with dual voltage (230/460) motors and permits use of 230 volt brake coil for either line voltage. Brake coil lead connections are to be completed in the motor terminal box.

DIAGRAM II: Allows usage with dual voltage (230/460) motors, and must be used with single voltage motors. Brake coil voltage must equal line voltage. Brake coil lead connections are to be completed in the motor terminal box.

DIAGRAM III: Must be used on any installation where control system uses a startmaster or ballast resistor to cushion motor start. Brake coil voltage must equal line voltage. Wiring must be run to the control system such that the brake coil will receive full voltage.

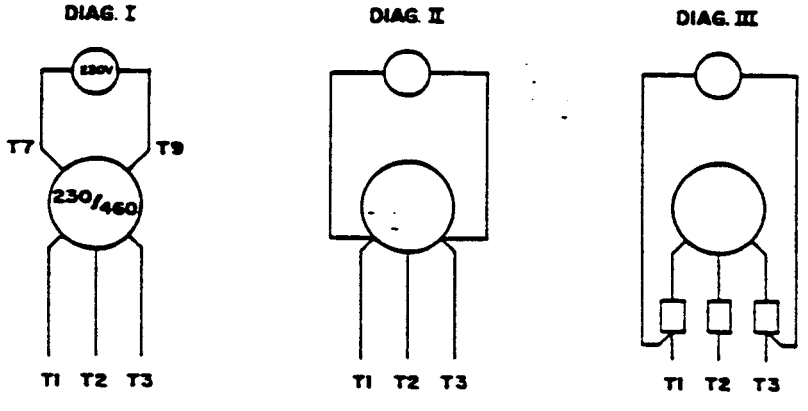

FRAME 1

3-1

FRAME & COMPONENTS

OCT 1982

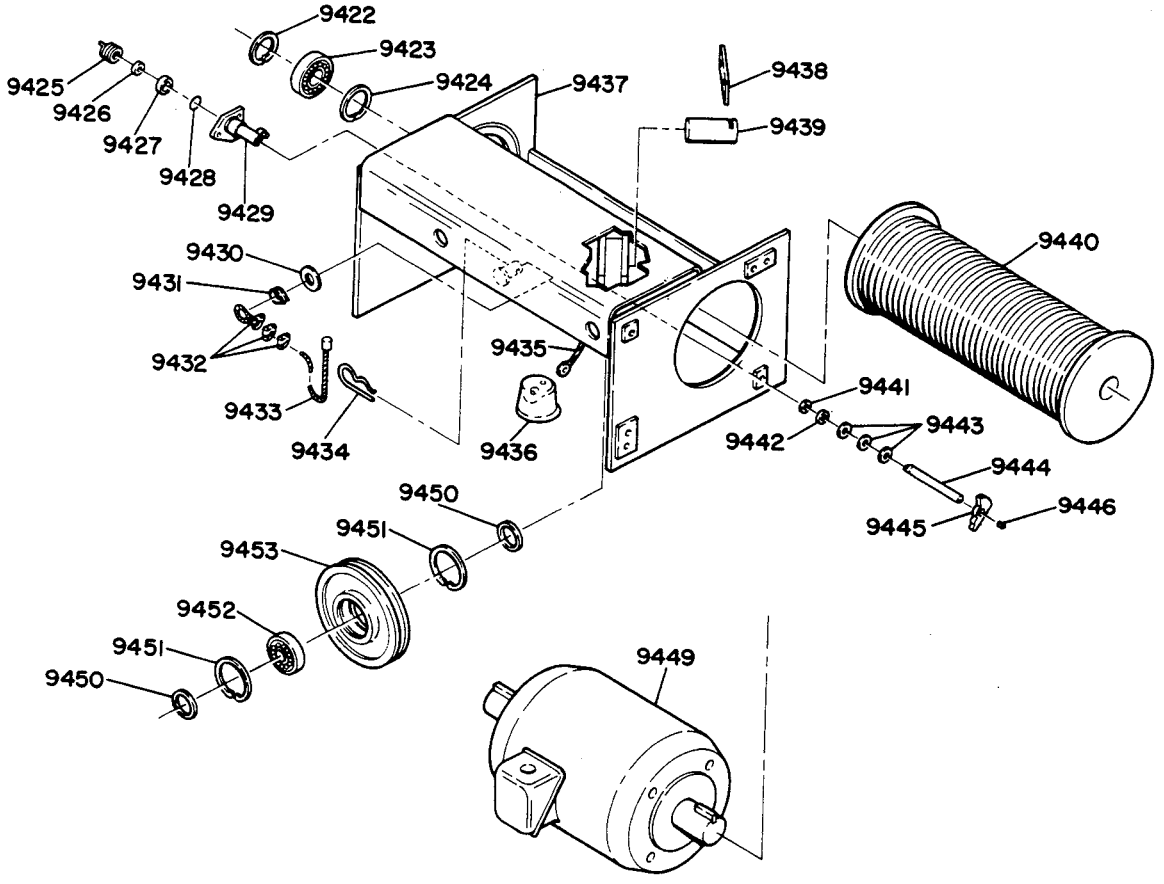

ITEM	DESCRIPTION	PART NUMBER	QTY
9422	Snap Ring	22-06497-010	1
9423	Ball Bearing	6-30-050-205-1	1
9424	Snap Ring	22-06497-004	1
9425	Spring	22-09449-001	1
9426	Retaining Ring	22-06497-007	1
9427	Bearing	6-30-102-007-0	1
9428	"O" Ring	Not Required	
9429	Mounting Bracket	22-08533-008	1
9430	Washer	6-23-003-009-1	1
9431	Rope Thimble	22-00306-001	1
9432	Rope Clips	22-00305-001	3
9433	Wire Rope	See Cable Section	1
9434	Pin	22-11646-001	1
9435	Limit Cable ½ & 1 Ton	22-09092-001	1
	Limit Cable 1½ Ton	22-09092-031	1
	Limit Cable 2 Ton	22-09092-042	1

FRAME & COMPONENTS

ITEM	DESCRIPTION	PART NUMBER	QTY
9436	Limit Weight	23-02305-701	1
9437	Main Frame		
	1st Length WO/MS/MSM	25-03127-001	1
	2nd Length WO/MS/MSM	25-03127-002	1
	1st Length W/MS/MSM	25-03127-003	1
	2nd Length W/MS/MSM	25-03127-004	1
9438	Keeper Plate	22-01800-004	1
9439	Sheave Pin	22-11645-001	1
9440	Rope Drum		
	1st Length	24-06091-001	1
	2nd Length	24-06091-002	1
9441	Ball Bearing	6-30-102-007-0	1
9442	Felt Washer	6-23-060-204-0	1
9443	Shim Washer	6-23-030-169-0	8
9444	Limit Switch Shaft		
	1st Length	22-09447-046	1
	2nd Length	22-09447-045	1
9445	Lever	23-06635-001	1
9446	Key	6-11-002-008-0	1
9449	Motor		
	1 HP 230/460V SS	23-07699-017	1
	1 HP 575V SS	23-07699-018	1
	2 HP 230/460V SS	23-08048-004	1
	2 HP 575V SS	23-08048-006	1
	1/.33 HP 230V 2-SP	23-07699-028	1
	1/.33 HP 460V 2-SP	23-07699-032	1
	1/.33 HP 575V 2-SP	23-07699-035	1
	2/.66 HP 230V 2-SP	23-08048-012	1
	2/.66 HP 460V 2-SP	23-08048-013	1
	2/.66 HP 575V 2-SP	23-08048-014	1
9450	Spacer	22-01948-023	2
9451	Snap Ring	22-06498-010	2
9452	Ball Bearing	6-30-050-205-1	1
9453	Sheave	22-11645-001	1
Not Shown	Limit Shaft Tube		
	1st Length	22-08538-045	1
	2nd Length	22-08538-046	1

FRAME 1

4-1

OCT 1982

HOIST GEAR CASE
1½ TON 2 HP MOTOR
4 PART 19.8 FPM

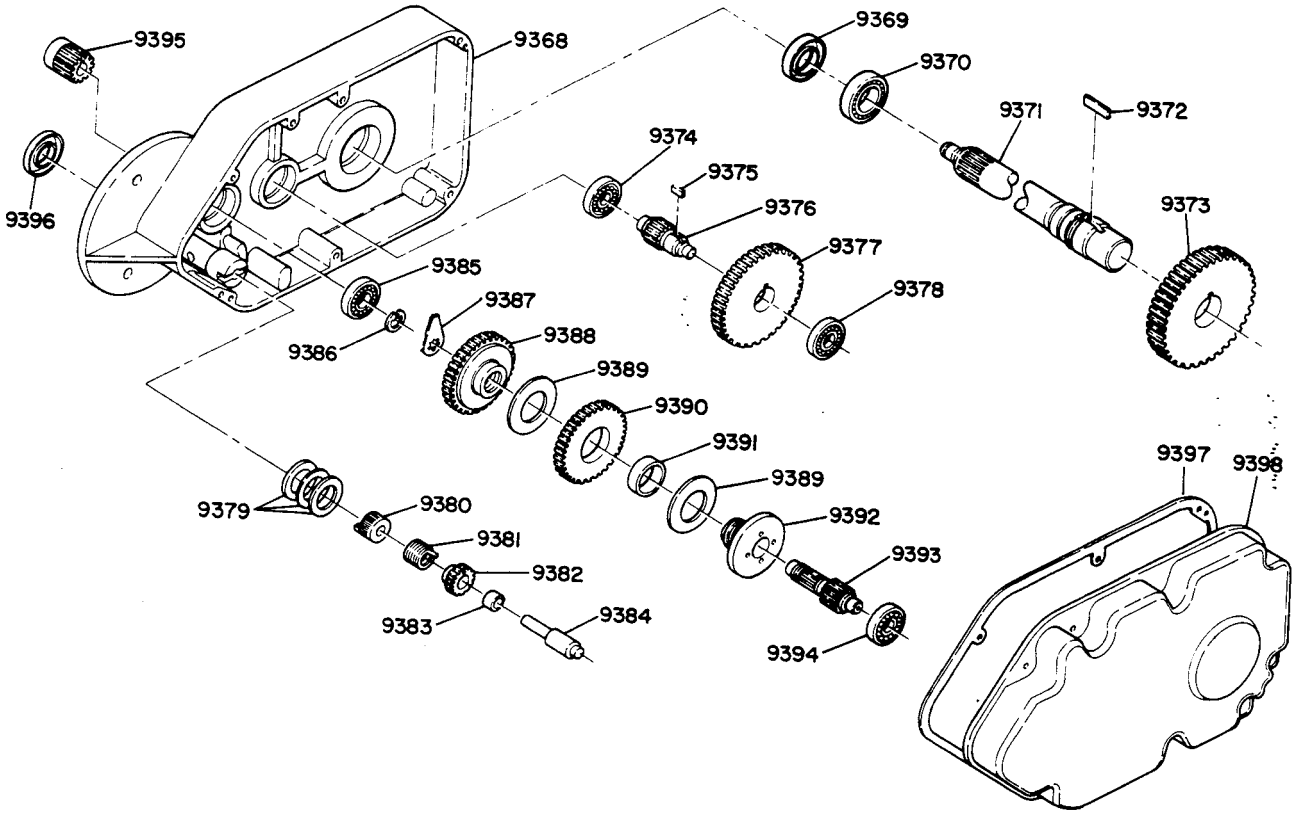

Reference 21-03756-001

ITEM	DESCRIPTION	PART NUMBER	QTY
9368	Gear Case	25-03119-003	1
9369	Oil Seal	22-09059-001	1
9370	Ball Bearing	6-30-041-210-0	1
9371	Drum Drive Shaft		
	1st Length	24-06093-001	1
	2nd Length	24-06093-002	1
9372	Key	6-11-030-016-0	1
9373	Drum Gear	24-06055-002	1
9374	Ball Bearing	6-30-041-205-0	1
9375	Key	6-11-026-012-0	1
9376	Drum Pinion	24-06069-002	1
9377	Intermediate Gear	24-06070-002	1
9378	Ball Bearing	6-30-041-204-0	1
9379	Spacer Washer	22-09474-001	3
9380	Clutch Spring Anchor	22-06487-001	1
9381	Spring	22-08648-001	1
9382	Clutch Pinion	22-08647-002	1

HOIST GEAR CASE
1½ TON 2 HP MOTOR
4 PART 19.8 FPM

FRAME 1

4-2

OCT 1982

ITEM	DESCRIPTION	PART NUMBER	QTY
9383	Bushing	22-06517-001	1
9384	Clutch Shaft	22-06455-003	1
9385	Ball Bearing	6-30-041-204-0	1
9386	Snap Ring	22 06497-010	1
9387	Reverse Lever	22-06458-002	1
9388	Spider Gear	24-06087-001	1
9389	Friction Disc	22-06456-001	2
9390	Ratchet Gear	23-05217-001	1
9391	Bushing	22-06457-001	1
9392	Thrust Disc	24-06086-001	1
9393	Intermediate Pinion	24-06071-002	1
9394	Ball Bearing	6-30-041-204-0	1
9395	Motor Pinion	24-06073-001	1
9396	Oil Seal	22-11635-001	1
9397	Gasket	24-06074-001	1
9398	Gear Case Cover	25-03120-002	1

FRAME 1

4-3

OCT 1982

HOIST GEAR CASE
½,1,2 TON
2 PART 30 FPM
4 PART 15 FPM

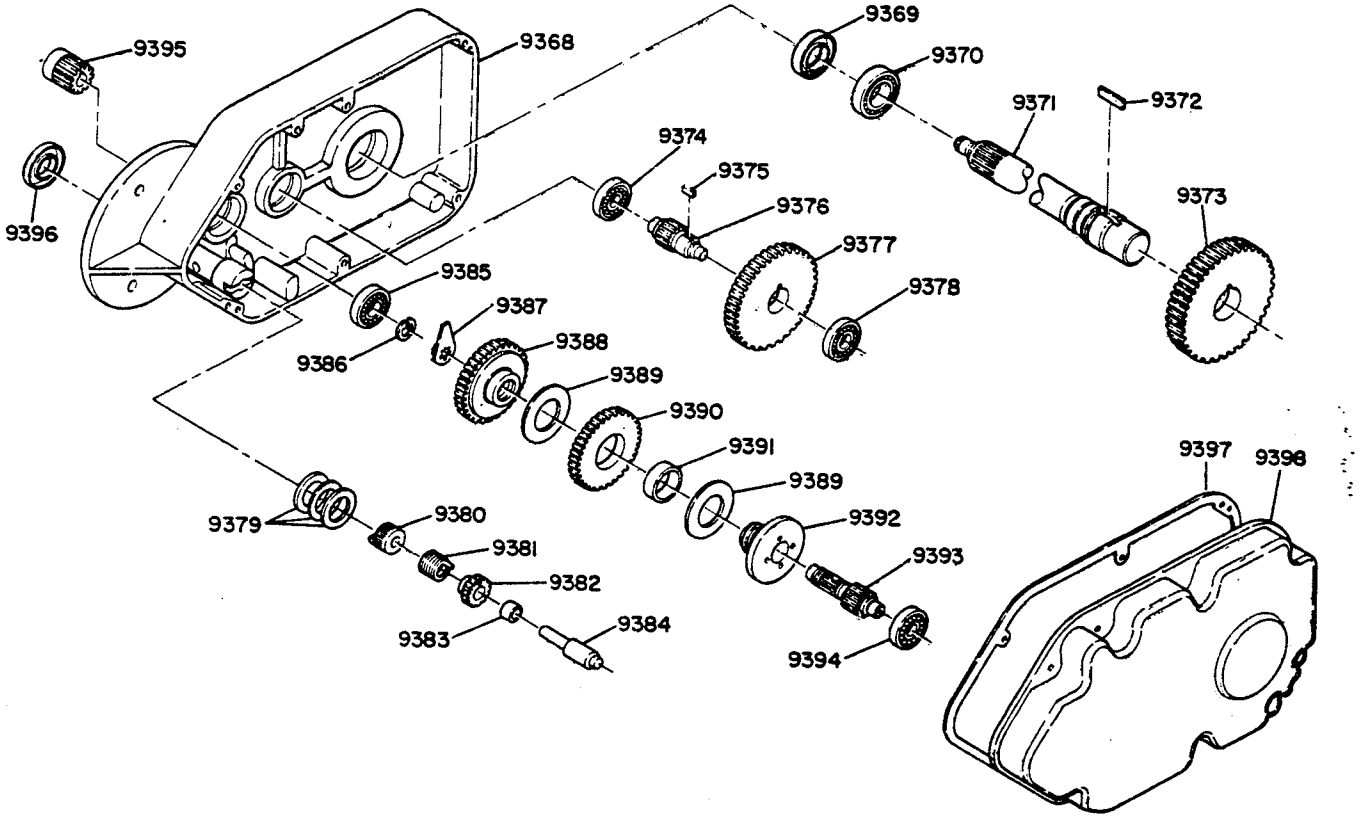

Reference 21-03756-002

ITEM	DESCRIPTION	PART NUMBER	QTY
9368	Gear Case	25-03119-003	1
9369	Oil Seal	22-09059-001	1
9370	Ball Bearing	6-30-041-210-0	1
9371	Drum Drive Shaft		
	1st Length	24-06093-001	1
	2nd Length	24-06093-002	1
9372	Key	6-11-030-016-0	1
9373	Drum Gear	24-06055-002	1
9374	Ball Bearing	6-30-041-205-0	1
9375	Key	6-11-026-012-0	1
9376	Drum Pinion	24-06069-002	1
9377	Intermediate Gear	24-06070-001	1
9378	Ball Bearing	6-30-041-204-0	1
9379	Spacer Washer	22-09474-001	3
9380	Clutch Spring Anchor	22-06487-001	1
9381	Spring	22-08648-001	1
9382	Clutch Pinion	22-08647-002	1

HOIST GEAR CASE
½,1,2 TON
2 PART 30 FPM
4 PART 15 FPM

FRAME 1

4-4

OCT 1982

ITEM	DESCRIPTION	PART NUMBER	QTY
9383	Bushing	22-06517-001	1
9384	Clutch Shaft	22-06455-003	1
9385	Ball Bearing	6-30-041-204-0	1
9386	Snap Ring	22-06497-010	1
9387	Reverse Lever	22-06458-002	1
9388	Spider Gear	24-06087-001	1
9389	Friction Disc	22-06456-001	2
9390	Ratchet Gear	23-05217-001	1
9391	Bushing	22-06457-001	1
9392	Thrust Disc	24-06086-001	1
9393	Intermediate Pinion	24-06071-001	1
9394	Ball Bearing	6-30-041-204-0	1
9395	Motor Pinion	24-06073-001	1
9396	Oil Seal	22-11635-001	1
9397	Gasket	24-06074-001	1
9398	Gear Case Cover	25-03120-002	1

FRAME 1

4-5

OCT 1982

HOIST GEAR CASE
1½ TON 1 HP MOTOR
4 PART 9.7 FPM

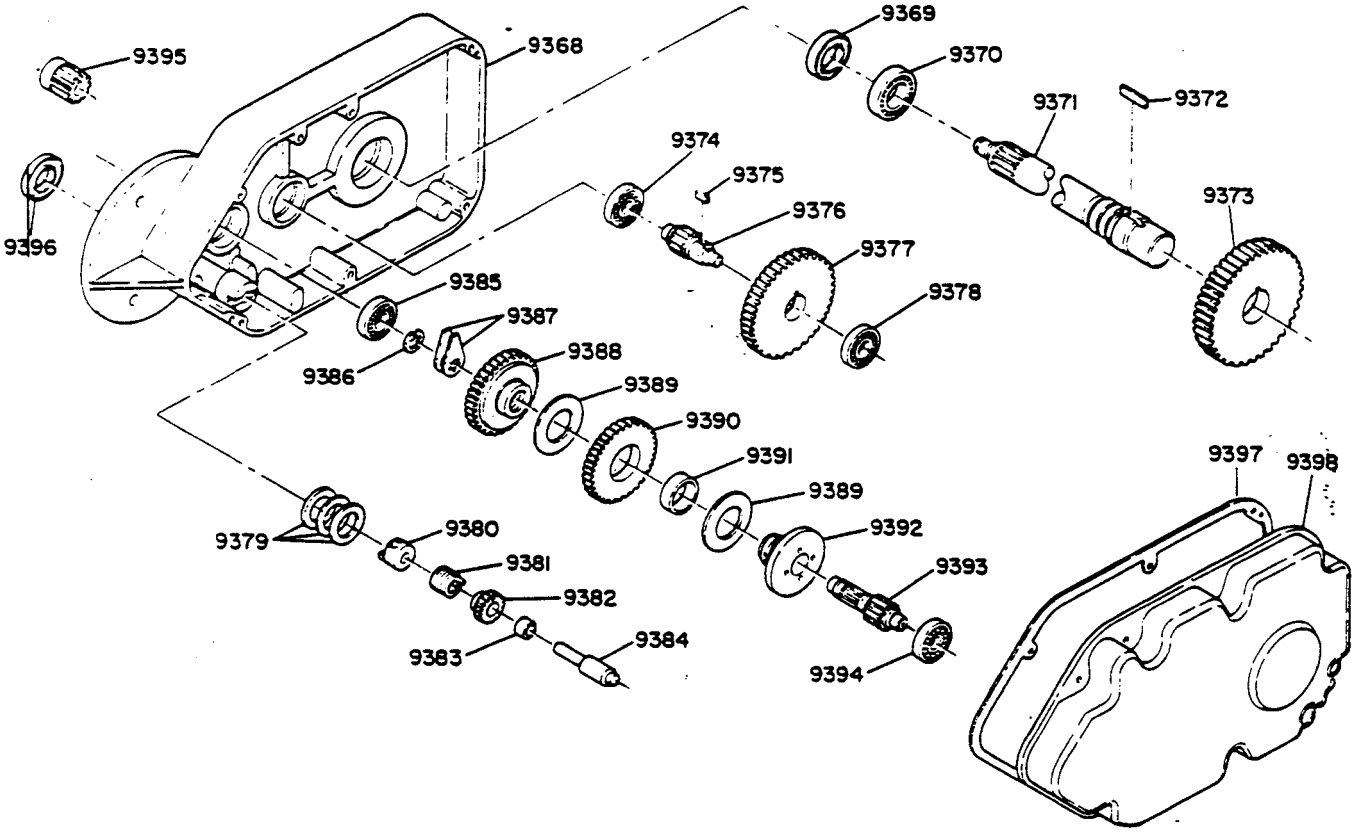

Reference 21-03756-003

ITEM	DESCRIPTION	PART NUMBER	QTY
9368	Gear Case	25-03119-003	1
9369	Oil Seal	22-09059-001	1
9370	Ball Bearing	6-30-041-210-0	1
9371	Drum Drive Shaft		
	1st Length	24-06093-001	1
	2nd Length	24-06093-002	1
9372	Key	6-11-030-016-0	1
9373	Drum Gear	24-06085-001	1
9374	Ball Bearing	6-30-041-205-0	1
9375	Key	6-11-026-012-0	1
9376	Drum Pinion	24-06069-001	1
9377	Intermediate Gear	24-06070-002	1
9378	Ball Bearing	6-30-041-204-0	1
9379	Spacer Washer	22-09474-001	3
9380	Clutch Spring Anchor	22-06487-001	1
9381	Spring	22-08648-001	1
9382	Clutch Pinion	22-08647-002	1

HOIST GEAR CASE
1½ TON 1 HP MOTOR
4 PART 9.7 FPM

ITEM	DESCRIPTION	PART NUMBER	QTY
9383	Bushing	22-06517-001	1
9384	Clutch Shaft	22-06455-003	1
9385	Ball Bearing	6-30-041-204-0	1
9386	Snap Ring	22-06497-010	1
9387	Reverse Lever	22-06458-002	1
9388	Spider Gear	24-06087-001	1
9389	Friction Disc	22-06456-001	2
9390	Ratchet Gear	23-05217-001	1
9391	Bushing	22-06457-001	1
9392	Thrust Disc	24-06086-001	1
9393	Intermediate Pinion	24-06071-002	1
9394	Ball Bearing	6-30-041-204-0	1
9395	Motor Pinion	24-06073-001	1
9396	Oil Seal	22-11635-001	1
9397	Gasket	24-06074-001	1
9398	Gear Case Cover	25-03120-002	1

FRAME 1

4-7

OCT 1982

HOIST GEAR CASE
1,2 TON 1 HP MOTOR
2 PART 14.8 FPM
4 PART 7.4 FPM

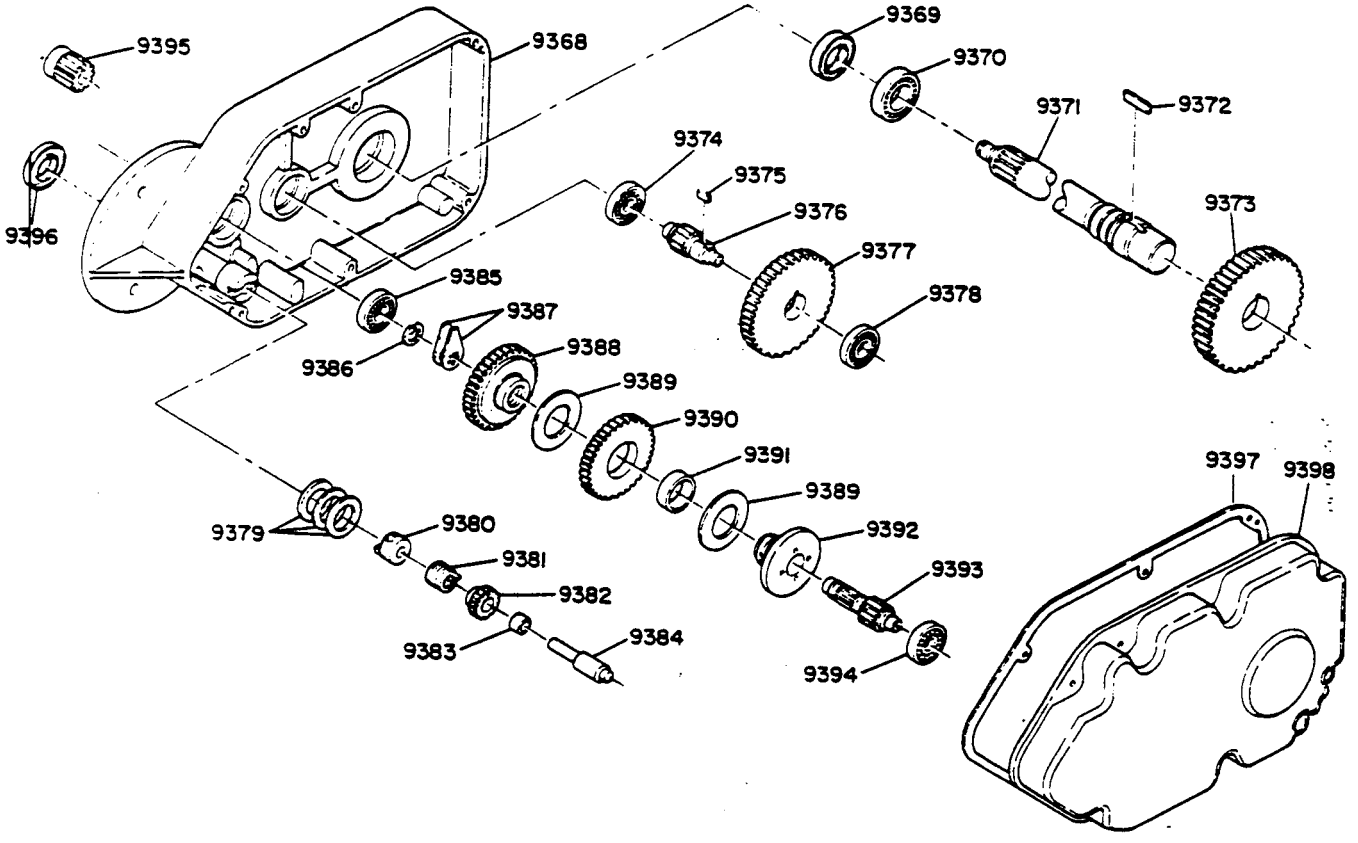

Reference 21-03756-004

ITEM	DESCRIPTION	PART NUMBER	QTY
9368	Gear Case	25-03119-003	1
9369	Oil Seal	22-09059-001	1
9370	Ball Bearing	6-30-041-210-0	1
9371	Drum Drive Shaft		
	1st Length	24-06093-001	1
	2nd Length	24-06093-002	1
9372	Key	6-11-030-016-0	1
9373	Drum Gear	24-06085-001	1
9374	Ball Bearing	6-30-041-205-0	1
9375	Key	6-11-026-012-0	1
9376	Drum Pinion	24-06069-001	1
9377	Intermediate Gear	24-06070 001	1
9378	Ball Bearing	6-30-041-204-0	1
9379	Spacer Washer	22-09474 001	3
9380	Clutch Spring Anchor	22-06487-001	1
9381	Spring	22-08648-001	1
9382	Clutch Pinion	22-08647-002	1

HOIST GEAR CASE
1,2 TON 1 HP MOTOR
2 PART 14.8 FPM
4 PART 7.4 FPM

FRAME 1

4-8

OCT 1982

ITEM	DESCRIPTION	PART NUMBER	QTY
9383	Bushing	22-06517-001	1
9384	Clutch Shaft	22-06455-003	1
9385	Ball Bearing	6-30-041-204-0	1
9386	Snap Ring	22-06497-010	1
9387	Reverse Lever	22-06458-002	1
9388	Spider Gear	24-06087-001	1
9389	Friction Disc	22-06456-001	2
9390	Ratchet Gear	23-05217-001	1
9391	Bushing	22-06457-001	1
9392	Thrust Disc	24-06086-001	1
9393	Intermediate Pinion	24-06071-001	1
9394	Ball Bearing	6-30-041-204-0	1
9395	Motor Pinion	24-06073-001	1
9396	Oil Seal	22-11635-001	1
9397	Gasket	24-06074-001	1
9398	Gear Case Cover	25-03120-002	1

LOAD BRAKE

Load Brake

All load brakes are self-adjusting and require a minimum of maintenance. Wear on friction disc should be checked during any gearcase maintenance. Replace discs when thickness reaches 1/32".

To adjust for disc wear, or reset after disc replacement, turn gear (left hand) down firmly against linings. Then assemble the reverse lever so the gap (see Figure 6-1a) is between 1/8" and 3/16".

The load brake should be checked for proper holding action after any load brake maintenance is performed.

To check to see whether load brake is holding properly, attach approximately a 25% capacity load to hook and raise off floor 6". Release motor brake by backing off adjusting nuts. Load should remain suspended. If load drifts to floor, check for malfunctioning spring clutch assembly or worn friction discs. Repair/replace as necessary.

NOTE: Severe impact or shock loads on hook due to improper handling of loads may result in a locked load brake. Load can be raised, but motor torque is not sufficient to unlock brake to permit lowering, and motor stalls. If load brake does not release after several inchings of the down button, the load must be removed from the hook before manual efforts are made to unlock the brake. It is recommended that the unlocking and subsequent inspection of the load brake be performed by a serviceman experienced in these areas.

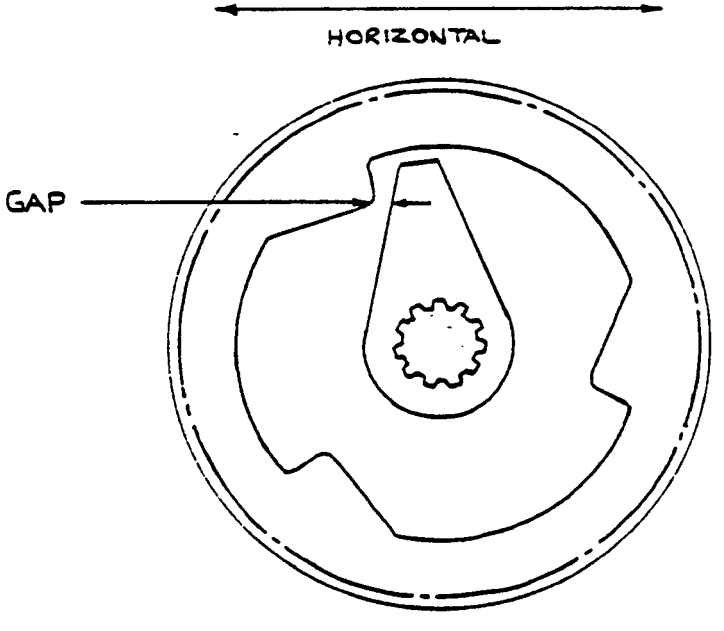

HOIST CONTROLS

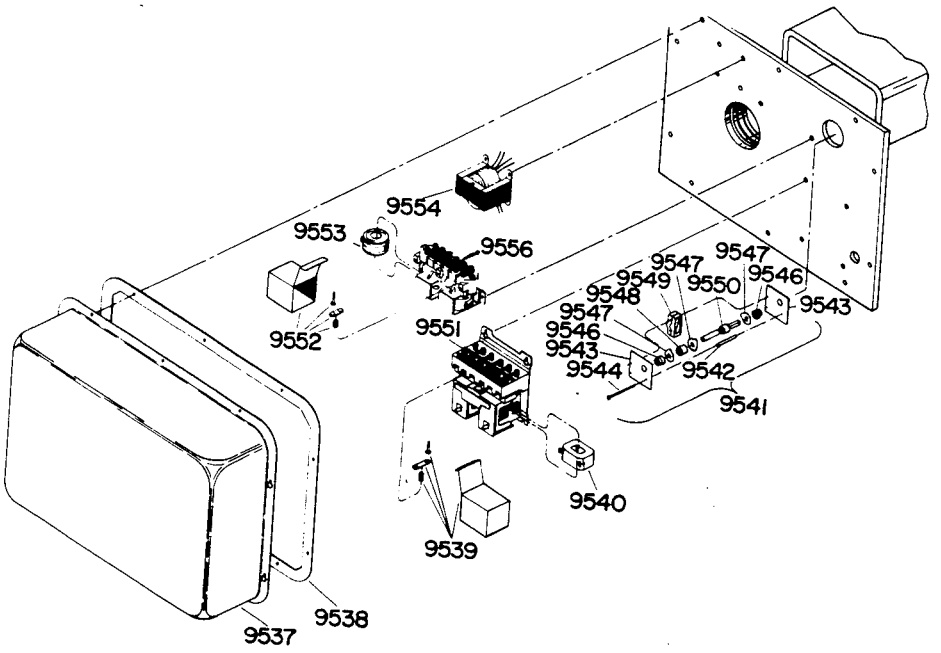

ITEM	DESCRIPTION	PART NUMBER	QTY
9537	Control Cover	24-06106-701	1
9538	Gasket	22-11655-002	1
9539	Contact Kit (Hoist)	22-09509-001	1
9540	Coil 24V (Hoist)	22-09507-006	1
	Coil 115V	22-09507-001	1
9541	Limit Switch Assembly		1
9542	Side Plate Spacer	22-08540-002	1
9543	Side Plate	22-08535-002	2
9544	Screw	6-19-152-121	2
9545	Bushing	22-08536-001	2
9547	Cam	22-08534-001	3
9548	Cam Spacer	22-08546-001	1
9549	Micro Switch	23-05987-003	3
9550	Limit Shaft	22-08539-002	1
9551	Hoist Controller	22-09494-001	1
9552	Contact Kit (Trolley)	22-09509-001	1
9553	Coil 24V (Trolley)	22-09507-006	2
	Coil 115V	22-09507-001	2
9554	Transformer		
	230/460V SS Hoist	23-07228-007	1
	575V SS Hoist	23-07228-008	1
	230/460V SS Hoist & Trolley	23-07228-051	1
	230/460V 2-SP Hoist SS Tr	23-07228-051	1
	575V SS Hoist & 2-SP Tr	23-07228-052	1
9555	Trolley Contactor	22-09494-001	1

FRAME 1

6-1 M TROLLEY

OCT 1982

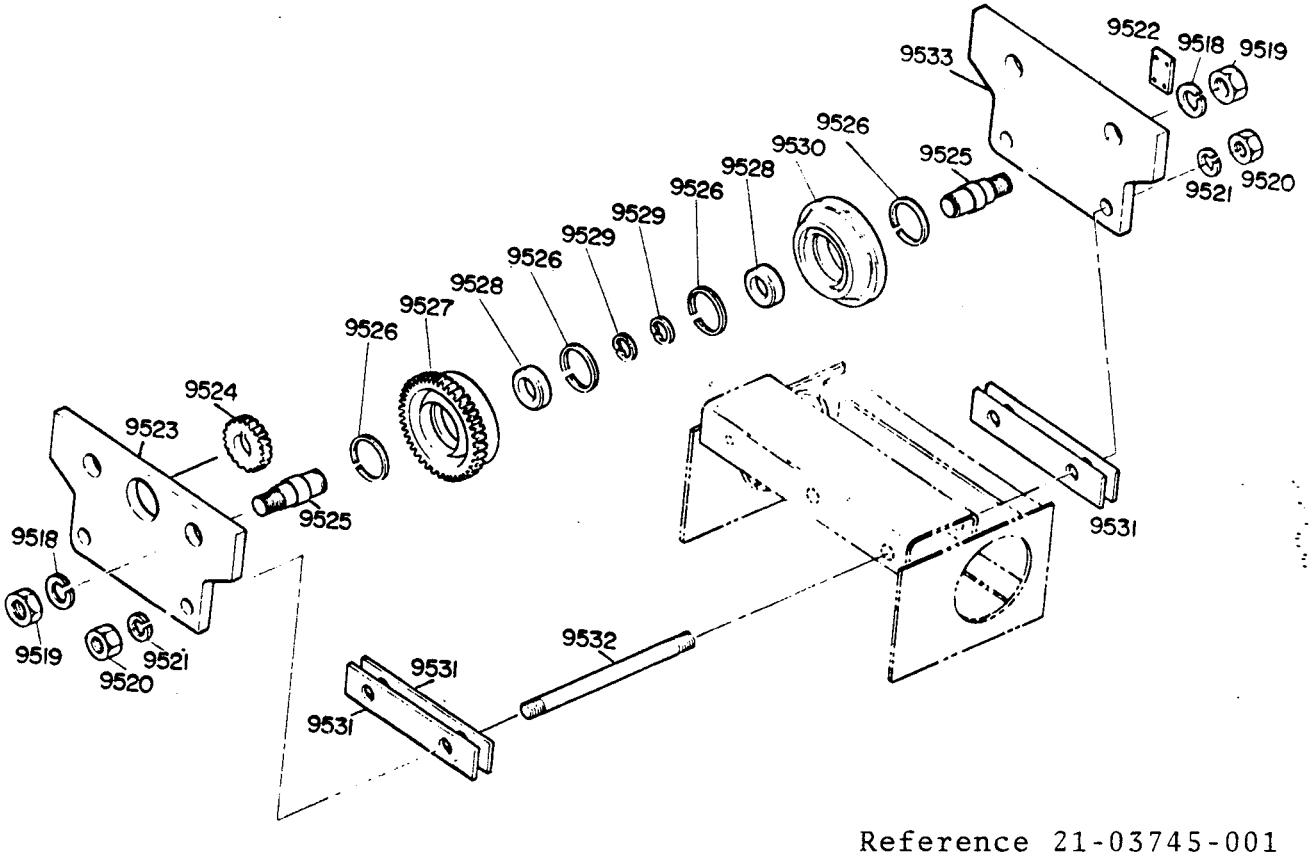

Reference 21-03745-001

ITEM	DESCRIPTION	PART NUMBER	QTY
9518	Lock Washer	6-23-001-055-0	4
9519	Hex Nut	6-14-008-032-0	4
9520	Hex Nut	6-14-007-010-0	4
9521	Lock Washer	6-23-001-051-0	4
9522	Clamp Plate	Not Required	
9523	Drive Side Plate	24-06058-001	1
9524	Drive Pinion	22-11628-001	1
	Pinion Key	6-11-024-034-0	1
	Pinion Set Screws	6-06-077-008-3	2
9525	Wheel Stud	22-11594-001	4
9526	Retaining Ring	22-06498-005	4
9527	Geared Wheel	23-08022-001	2
9528	Ball Bearing	6-30-050-206-1	4
9529	Retaining Ring	22-06497-003	4
9530	Idler Wheel	23-08022-002	2
9531	Spacer Plate	22-11595-001	26
9532	Mounting Stud	22-11596-001	2
9533	Idler Side Plate	24-06058-002	1

M TROLLEY
WITH PAT'D TRACK
FLAT TREAD WHEELS

FRAME 1

6-2

OCT 1982

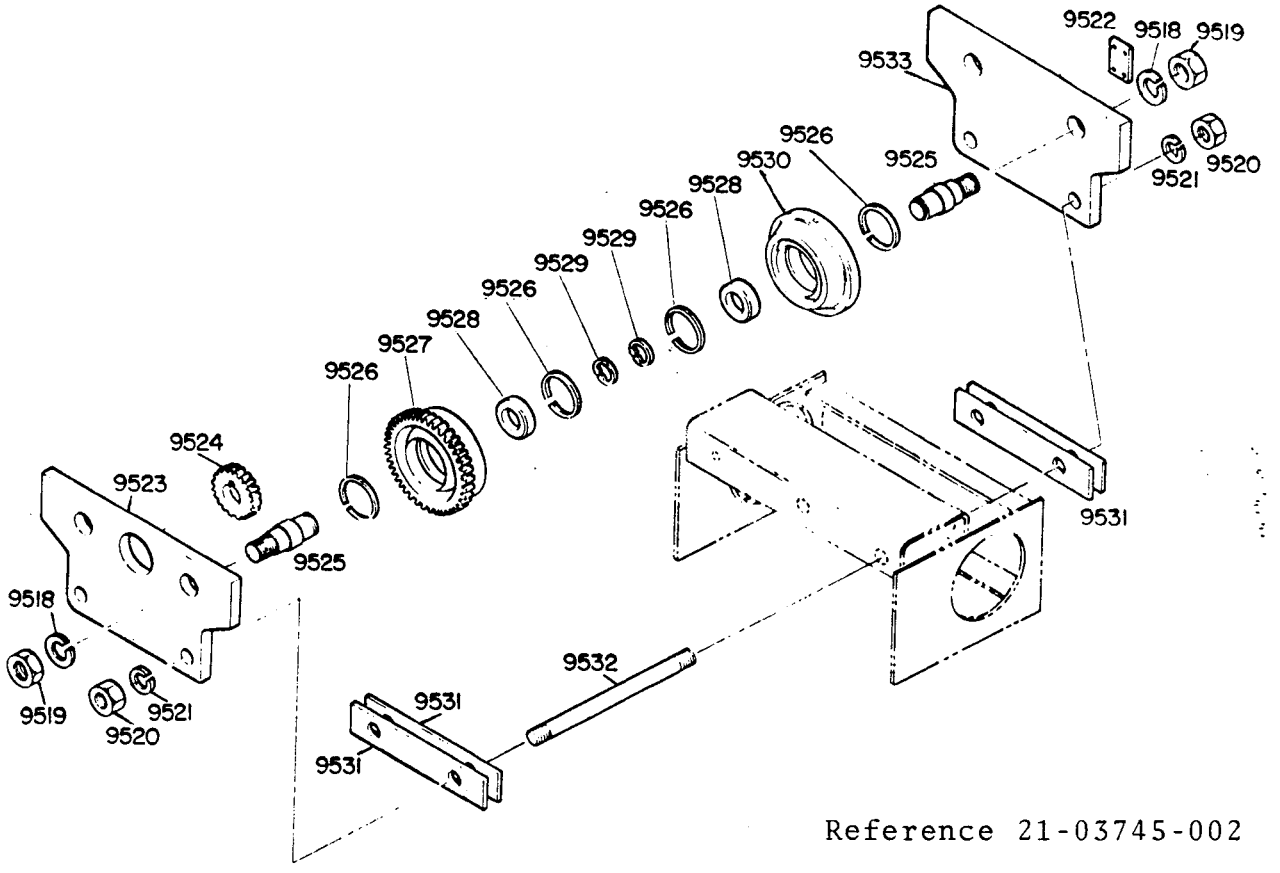

Reference 21-03745-002

ITEM	DESCRIPTION	PART NUMBER	QTY
9518	Lock Washer	6-23-001-055-0	4
9519	Hex Nut	6-14-008-032-0	4
9520	Hex Nut	6-14-007-010-0	4
9521	Lock Washer	6-23-001-051-0	4
9522	Clamp Plate	Not Required	
9523	Drive Side Plate	24-06058-001	1
9524	Drive Pinion	22-11628-001	1
	Pinion Key	6-11-024-034-0	1
	Pinion Set Screws	6-06-077-008-3	2
9525	Wheel Stud	22-11594-001	4
9526	Retaining Ring	22-06498-005	4
9527	Geared Wheel	23-08022-003	2
9528	Ball Bearing	6-30-050-206-1	4
9529	Retaining Ring	22-06497-003	4
9530	Idler Wheel	23-08022-004	2
9531	Spacer Plate	22-11595-001	26
9532	Mounting Stud	22-11596-001	2
9533	Idler Side Plate	24-06058-002	1

FRAME 1

6-3 B TROLLEY

OCT 1982

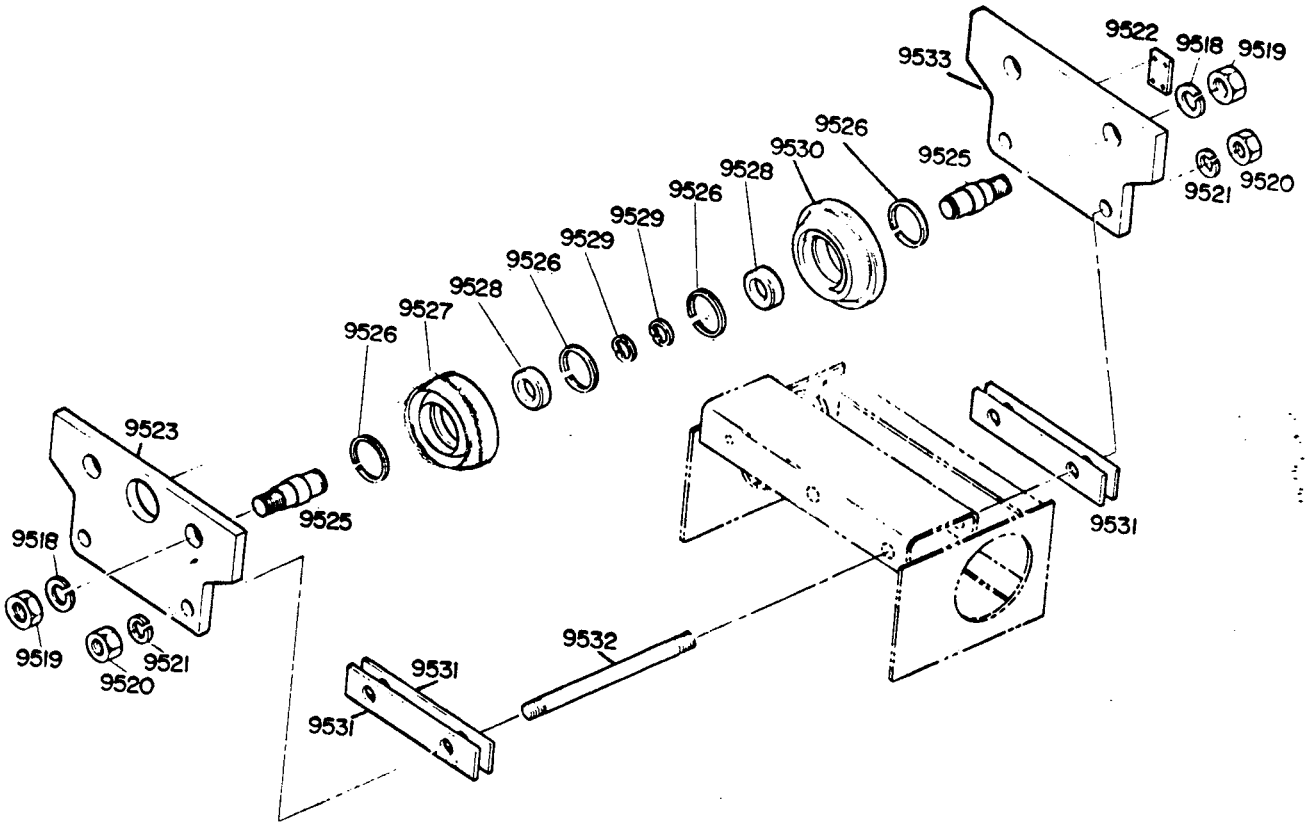

Reference 21-03746-001

ITEM	DESCRIPTION	PART NUMBER	QTY
9518	Lock Washer	6-23-001-055-0	4
9519	Hex Nut	6-14-008-032-0	4
9520	Hex Nut	6-14-007-010-0	4
9521	Lock Washer	6-23-001-051-0	4
9522	Clamp Plate	Not Required	
9523	Side Plate	24-06058-002	1
9525	Wheel Stud	22-11594-001	4
9526	Retaining Ring	22-06498-005	4
9527	Wheel	23-08022-002	2
9528	Ball Bearing	6-30-050-206-1	4
9529	Retaining Ring	22-06497-003	4
9530	Wheel	23-08022-002	2
9531	Spacer Plate	22-11595-001	26
9532	Mounting Stud	22-11596-001	2
9533	Side Plate	24-06058-002	1

B TROLLEY

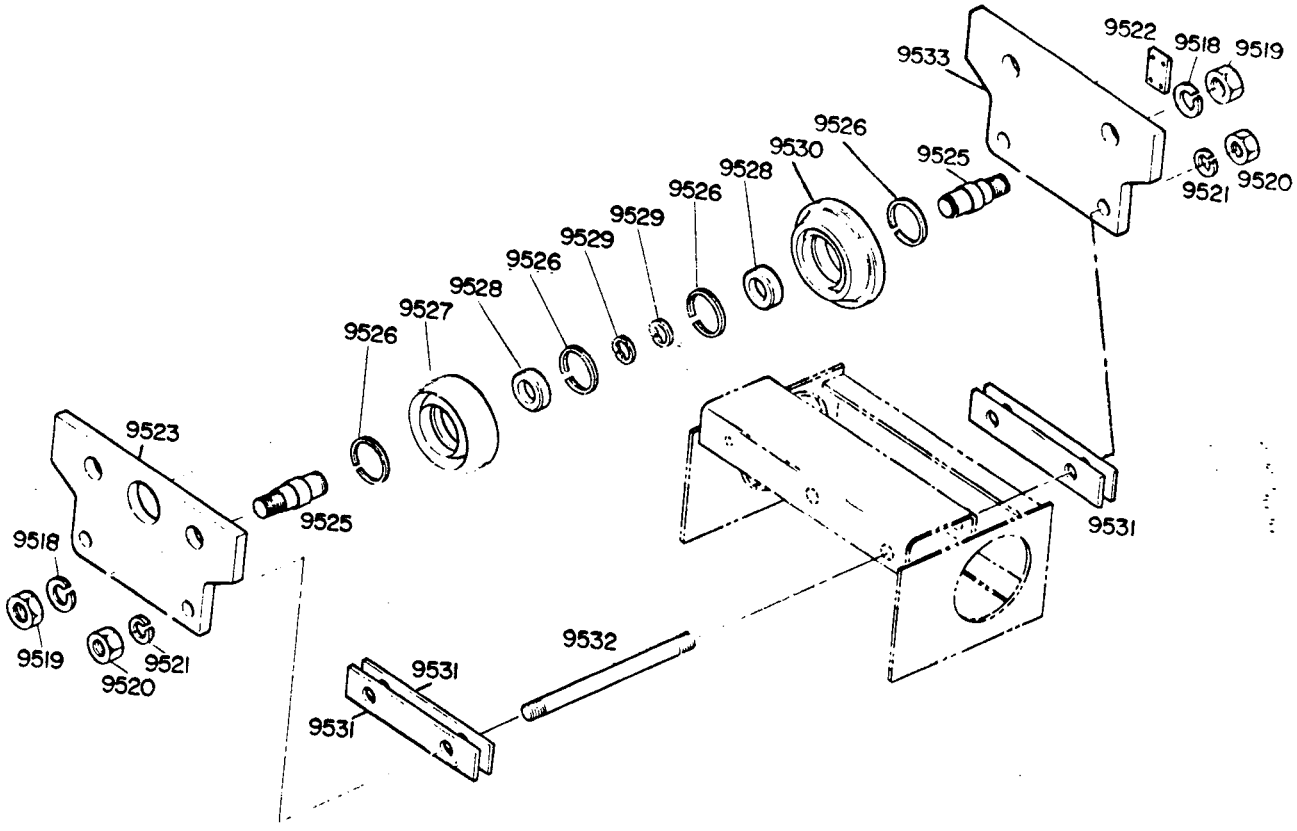

Reference 21-03746-002

ITEM	DESCRIPTION	PART NUMBER	QTY
9518	Lock Washer	6-23-001-055-0	4
9519	Hex Nut	6-14-008-032-0	4
9520	Hex Nut	6-14-007-010-0	4
9521	Lock Washer	6-23-001-051-0	4
9522	Clamp Plate	Not Required	
9523	Side Plate	24-06058-002	1
9525	Wheel Stud	22-11594-001	4
9526	Retaining Ring	22-06498-005	4
9527	Wheel	23-08022-004	2
9528	Ball Bearing	6-30-050-206-1	4
9529	Retaining Ring	22-06497-003	4
9530	Wheel	23-08022-004	2
9531	Spacer Plate	22-11595-001	26
9532	Mounting Stud	22-11596-001	2
9533	Side Plate	24-06058-002	1

FRAME 1

6-5 HAND GEARED TROLLEY

OCT 1982

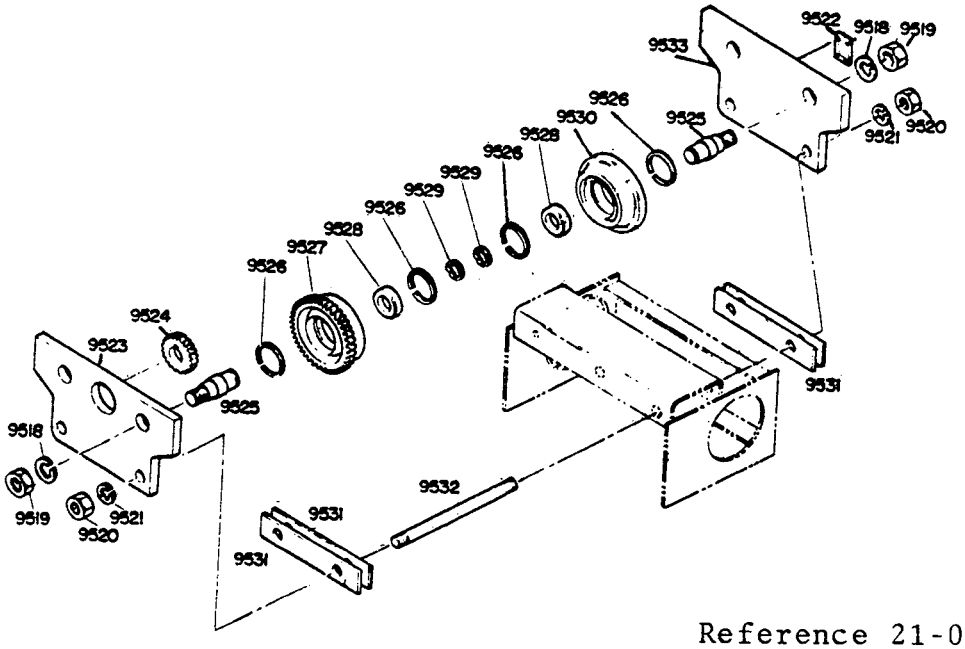

Reference 21-03765-001

ITEM	DESCRIPTION	PART NUMBER	QTY
9518	Lock Washer	6-23-001-055-0	4
9519	Hex Nut	6-14-008-032-0	4
9520	Hex Nut	6-14-007-010-0	4
9521	Lock Washer	6-23-001-051-0	4
9522	Clamp Plate	Not Required	
9523	Drive Side Plate	24-06058-001	1
9524	Drive Pinion	22-11628-001	1
	Pinion Key	6-11-024-034-0	1
	Pinion Set Screws	6-06-077-008-3	2
9525	Wheel Stud	22-11594-001	4
9526	Retaining Ring	22-06498-005	4
9527	Geared Wheel	23-08022-001	2
9528	Ball Bearing	6-30-050-206-1	4
9529	Retaining Ring	22-06497-003	4
9530	Idler Wheel	23-08022-002	2
9531	Spacer Plate	22-11595-001	26
9532	Mounting Stud	22-11596-001	2
9533	Idler Side Plate	24-06058-002	1
Not Shown	Shaft Bracket	23-07484-001	1
Not Shown	Shaft	23-07485-014	1
Not Shown	Chain Guard	24-00099-005	1
Not Shown	Hand Wheel	23-00007-004	1
Not Shown	Chain	22-00005-001	40 Ft

HAND GEARED TROLLEY WITH PAT'D TRACK

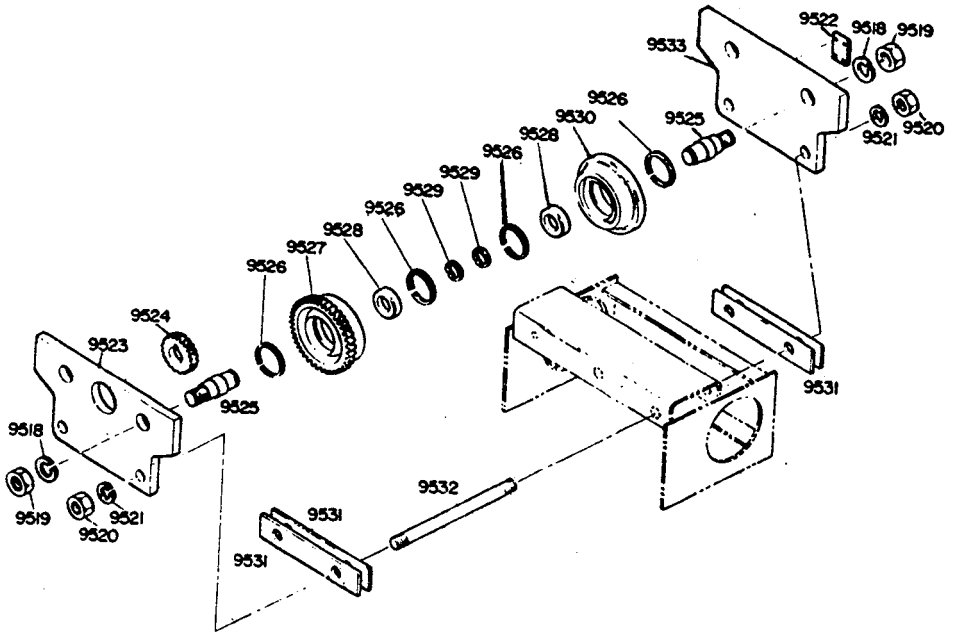

Reference 21-03765-002

ITEM	DESCRIPTION	PART NUMBER	QTY
9518	Lock Washer	6-23-001-055-0	4
9519	Hex Nut	6-14-008-032-0	4
9520	Hex Nut	6-14-007-010-0	4
9521	Lock Washer	6-23-001-051-0	4
9522	Clamp Plate	Not Required	
9523	Drive Side Plate	24-06058-001	1
9524	Drive Pinion	22-11628-001	1
	Pinion Key	6-11-024-034-0	1
	Pinion Set Screws	6-06-077-008-3	2
9525	Wheel Stud	22-11594-001	4
9526	Retaining Ring	22-06498-005	4
9527	Geared Wheel	23-08022-003	2
9528	Ball Bearing	6-30-050-206-1	4
9529	Retaining Ring	22-06497-003	4
9530	Idler Wheel	23-08022-004	2
9531	Spacer Plate	22-11595-001	26
9532	Mounting Stud	22-11596-001	2
9533	Idler Side Plate	24-06058-002	1
Not Shown	Shaft Bracket	23-07484-001	1
Not Shown	Shaft	23-07485-014	1
Not Shown	Chain Guard	24-00099-005	1
Not Shown	Hand Wheel	23-00007-004	1
Not Shown	Chain	22-00005-001	40 Ft

TROLLEY WHEEL SETTINGS

Trolley Wheel Setting

Trolleys designed to run on I-beams or WF sections (see Figure 6-2) must have wheel clearance such that there is approximately ⅛" clearance between wheel flange and rail with hoist/trolley centered on beam.

Note: If binding occurs while negotiating curves in track, trolley must be adjusted to provide $^1/_{16}$" maximum additional clearance between wheel and WF or I-beam flanges.

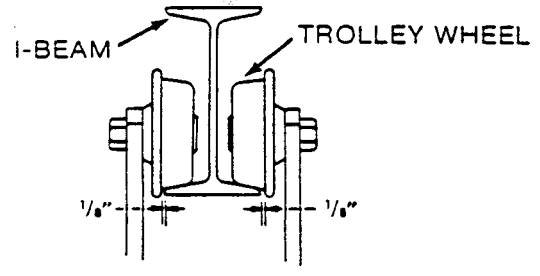

Figure 6-2

IMPORTANT

All spacers must be used, either inside or outside, to assure proper tightening of the trolley mounting studs. The same number of inside spacers must be used on each side to keep the hoist centered under the rail and maintain proper balance.

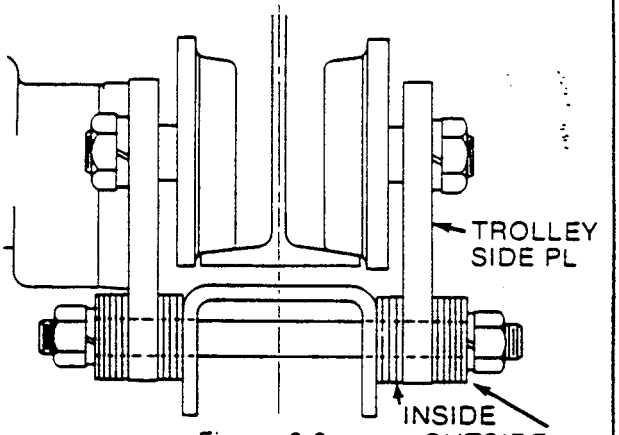

Figure 6-3a

Trolley Adjustment Procedure

To adjust wheel setting, spacers are provided at the trolley mounting studs (ref. Figure 6-3a). Placing additional spacers to the inside, between the trolley side plate and hoist load bar, will accommodate wider rail flanges. Removing spacers from the inside and placing them to the outside of the trolley side plates reduces the wheel spacing for smaller rail flanges.

Trolley Spacers

I-beam Flange		Inside
4⅝"		0-Each Side
5"		1-Each Side
5½"	EXAMPLE	4-Each Side
6"	SHOWN	6-Each Side
6¼"		7-Each Side
7"		10-Each Side

The above chart is a guide only. Due to mill tolerances on wide flange and I-beams, the number of spacers inside may vary. Trolley wheels must be spaced according to "Trolley Wheel Setting" per Fig. 6-2.